GENESIS®
The Promise of Performance.

GXT 775R Mobile Shear

PARTS MANUAL

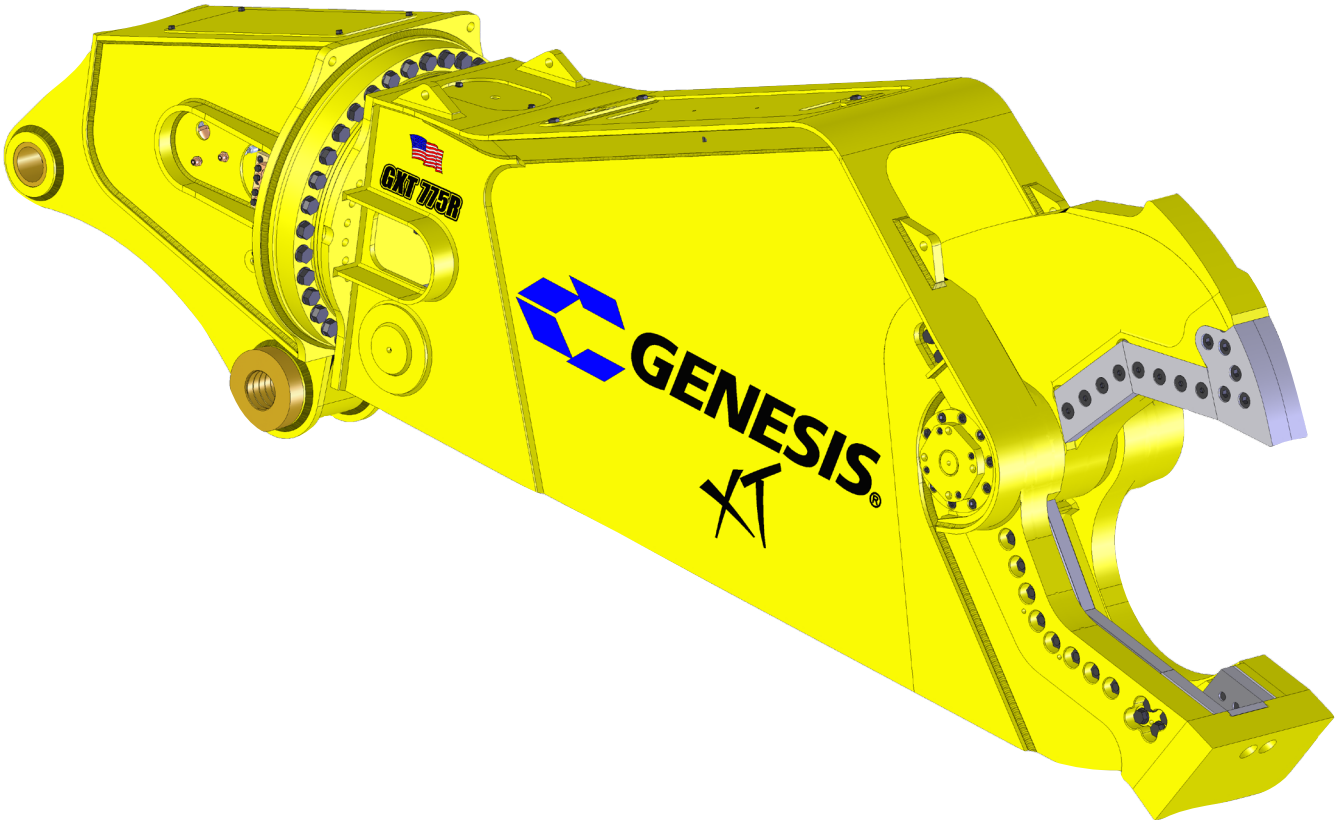

Genesis Attachments | 1000 Genesis Drive, Superior, WI 54880 | PH: 715-395-5252 | genesisattachments.com

An NPK Company

CONTACT INFORMATION

Genesis Attachments

1000 Genesis Drive
Superior, WI 54880 USA

Toll Free: 888-SHEAR-IT
(888-743-2748)

Phone: 715.395.5252

E-mail:
info@genesisattachments.com

Europe/Africa/Middle East
Genesis GmbH

Teramostrasse 23
87700 Memmingen, Germany

Phone: +49 83 31 9 25 98 0
Fax: +49 83 31 9 25 98 80
genesis-europe.com

E-mail:
info@genesis-europe.com

Asia Pacific Representative Office

24 Upper Serangoon View #12-28
Singapore 534205

Phone: +65 9673 9730

E-mail:
tchoo@genesisattachments.com

Central America & Colombia

Cra 13A #89-38 / Ofi 613
Bogota, Colombia

Phone: +57 1 610 8160 / 795 8747

E-mail:
contact@themsagroup.com

View and download all manuals: genesisattachments.com/manuals
Patents: genesisattachments.com/products/patents

© 2026 Genesis Attachments, LLC

TABLE OF CONTENTS

CONTACT INFORMATION 2
GENERAL ARRANGEMENT 4
ASSEMBLY PIVOT GROUP - RIGHT SIDE 6
ASSEMBLY PIVOT GROUP - LEFT SIDE 8
ASSEMBLY LOWER BLADES 10
ASSEMBLY UPPER BLADES 12
ASSEMBLY AUTO GUIDE 14
ASSEMBLY CYLINDER PINS 16
ASSEMBLY ACCESS COVERS 18
ASSEMBLY UPPER HEAD 20
ASSEMBLY ROTATION - PISTON MOTOR 22
ASSEMBLY ROTATION CIRCUIT - PISTON MOTOR 24
SUB-ASSEMBLY ROTATE CROSS-OVER / C'BAL 26
SUB-ASSEMBLY LINE MOUNT MANIFOLD 28
ASSEMBLY OPEN AND CLOSE CIRCUIT 30
ASSEMBLY SWIVEL MANIFOLD 32
REGEN BLOCK SUB-ASSEMBLY - 6360021 34
ASSEMBLY SLEWING RING LUBRICATION 36
BOLT TORQUE SPECIFICATIONS 38
THREAD TREATMENT DIAGRAM 39
Mobile Shears 39
PROCEDURES 40
Cleaning 40
Threadlocker 40
Anti-Seize 41
No Thread Treatment 41
BOLT TORQUE SPECIFICATIONS 42
Dry Torque Values 42
Wet Torque Values 42
O-RING BOSS & FLAT FACE O-RING TORQUE SPECIFICATIONS 43
BOLT DRIVE SPECIFICATIONS 44
WARRANTY 45
Claim Procedure 45
Blade Warranty 45
PARTS ORDER POLICY AND PROCEDURE 46
Parts Orders Should Include 46
Placing Orders 46
Part Numbers 46
Shipping 46
Invoices 46
Returns 46
Warranty Returns 46
PARTS ORDER FORM 47
INDEX 48
CONTACT INFORMATION 50

© 2026 Genesis Attachments, LLC

GENERAL ARRANGEMENT

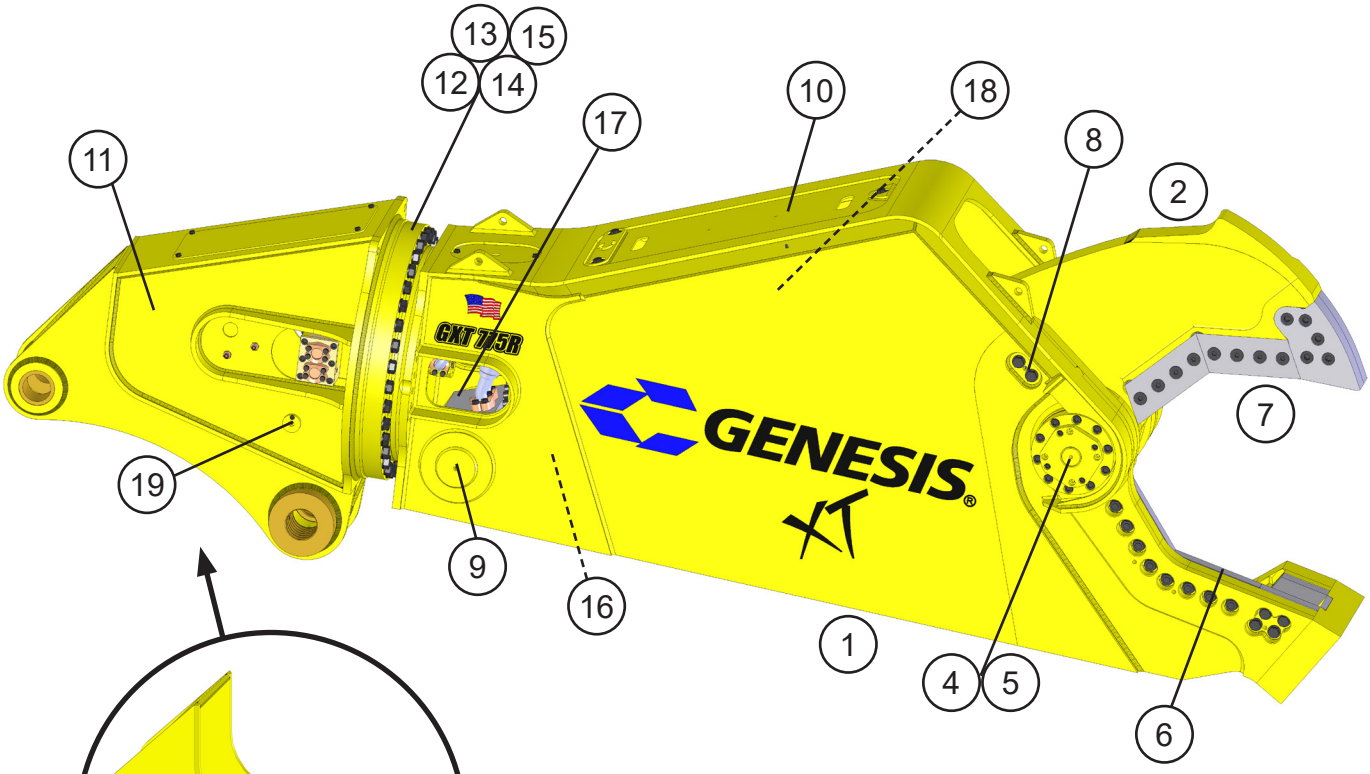

3

Wtmg Lug Upper Head

Part Number is Serial Number specific. For replacement parts call the Genesis Parts Department.

USA	**Europe**
715-395-3488	+49 83 31 9 25 98 0

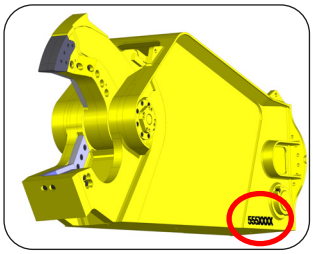

Serial Number Location

Facing the left side of shear, lower right corner.

© 2026 Genesis Attachments, LLC

GENERAL ARRANGEMENT

ITEM	QTY	PART NUMBER	DESCRIPTION
1	1	*	Wtmg Stick
2	1	*	Wtmg Upper
3		*	Wtmg Lug Upper Head
4		See page 6	Assembly Pivot Group - Right Side
5		See page 8	Assembly Pivot Group - Left Side
6		See page 10	Assembly Lower Blades
7		See page 12	Assembly Upper Blades
8		See page 14	Assembly Auto Guide
9		See page 16	Assembly Cylinder Pins
10		See page 18	Assembly Access Covers
11		See page 20	Assembly Upper Head
12		See page 22	Assembly Rotation
13		See page 24	Assembly Rotation Circuit
14		See page 26	Sub-Assembly Rotate Cross-over / C'bal
15		See page 28	Sub-Assembly Line Mount Manifold
16		See page 30	Assembly Open and Close Circuit
17		See page 32	Assembly Swivel Manifold
18		See page 34	Sub-Assembly Regen Block
19		See page 36	Assembly Slewing Ring Lubrication

* Part numbers are Serial Number specific. For replacement parts call the Genesis Parts Department.

USA
715-395-3488

Europe
+49 83 31 9 25 98 0

© 2026 Genesis Attachments, LLC

ASSEMBLY PIVOT GROUP - RIGHT SIDE

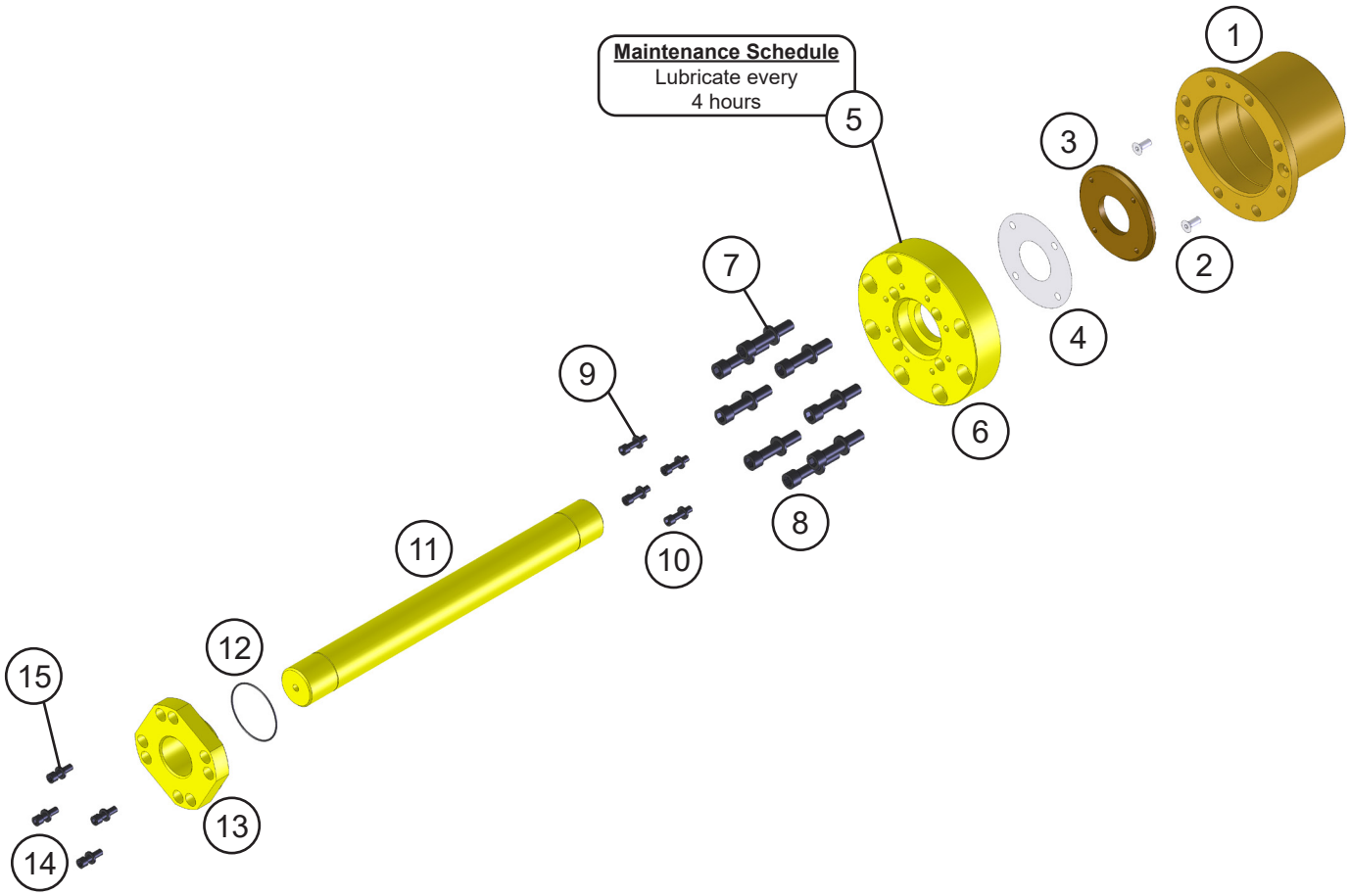

© 2026 Genesis Attachments, LLC

ASSEMBLY PIVOT GROUP - RIGHT SIDE

ITEM	QTY	PART NUMBER	DESCRIPTION
1	1	1104799	Mach Bearing
2	2	F0412030	Flat Head Capscrew M12 x 1.75 x 30
3	1	1101646	Mach Thrust Washer
4	1	1101649	Shim Set Thrust Washer
5	1	6200002	Grease Fitting
6	1	1106667	Mach End Cap
7	10	F1202037	Flat Washer M20
8	10	F0620090	Socket Head Capscrew M20 x 2.50 x 90
9	4	F1201021	Flat Washer M10
10	4	F0610035	Socket Head Capscrew M10 x 1.50 x 35
11	1	1106671	Mach Tie Rod
12	1	S0190350	O-Ring
13	1	1106669	Mach Tie Rod Nut
14	4	F0612040	Socket Head Capscrew M12 x 1.75 x 40
15	4	F1201224	Flat Washer M12

© 2026 Genesis Attachments, LLC

ASSEMBLY PIVOT GROUP - LEFT SIDE

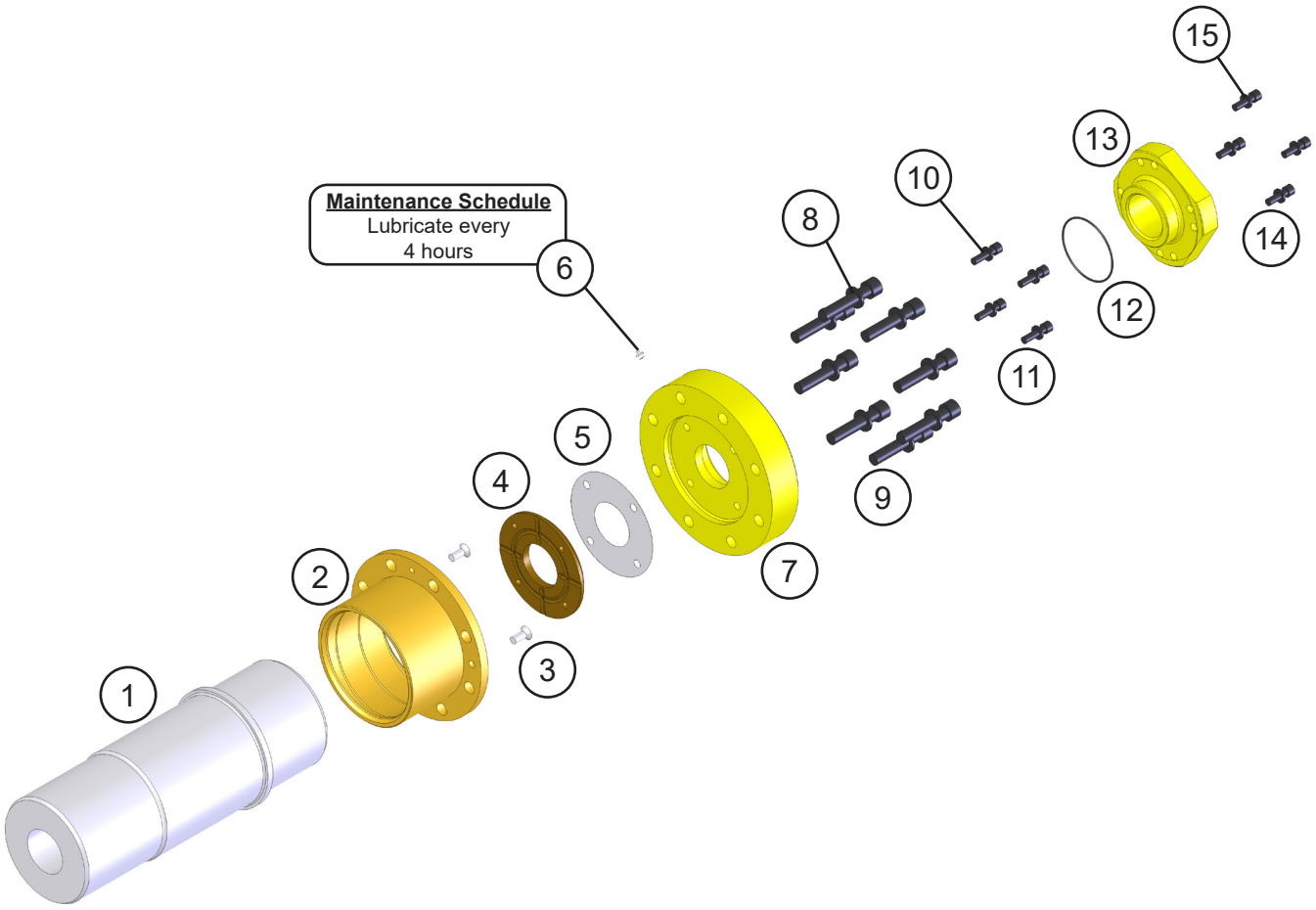

© 2026 Genesis Attachments, LLC

ASSEMBLY PIVOT GROUP - LEFT SIDE

ITEM	QTY	PART NUMBER	DESCRIPTION
1	1	*	Mach Main Shaft
2	1	1104799	Mach Bearing
3	2	F0412030	Flat Head Capscrew M12 x 1.75 x 30
4	1	1101646	Mach Thrust Washer
5	1	1101649	Shim Set Thrust Washer
6	1	6200002	Grease Fitting
7	1	1106667	Mach End Cap
8	10	F1202037	Flat Washer M20
9	10	F0620090	Socket Head Capscrew M20 x 2.50 x 90
10	4	F1201021	Flat Washer M10
11	4	F0610035	Socket Head Capscrew M10 x 1.50 x 35
12	1	S0190350	O-Ring
13	1	1106669	Mach Tie Rod Nut
14	4	F0612040	Socket Head Capscrew M12 x 1.75 x 40
15	4	F1201224	Flat Washer M12

* Part number is Serial Number specific. For replacement parts call the Genesis Parts Department.

USA
715-395-3488

Europe
+49 83 31 9 25 98 0

© 2026 Genesis Attachments, LLC

ASSEMBLY LOWER BLADES

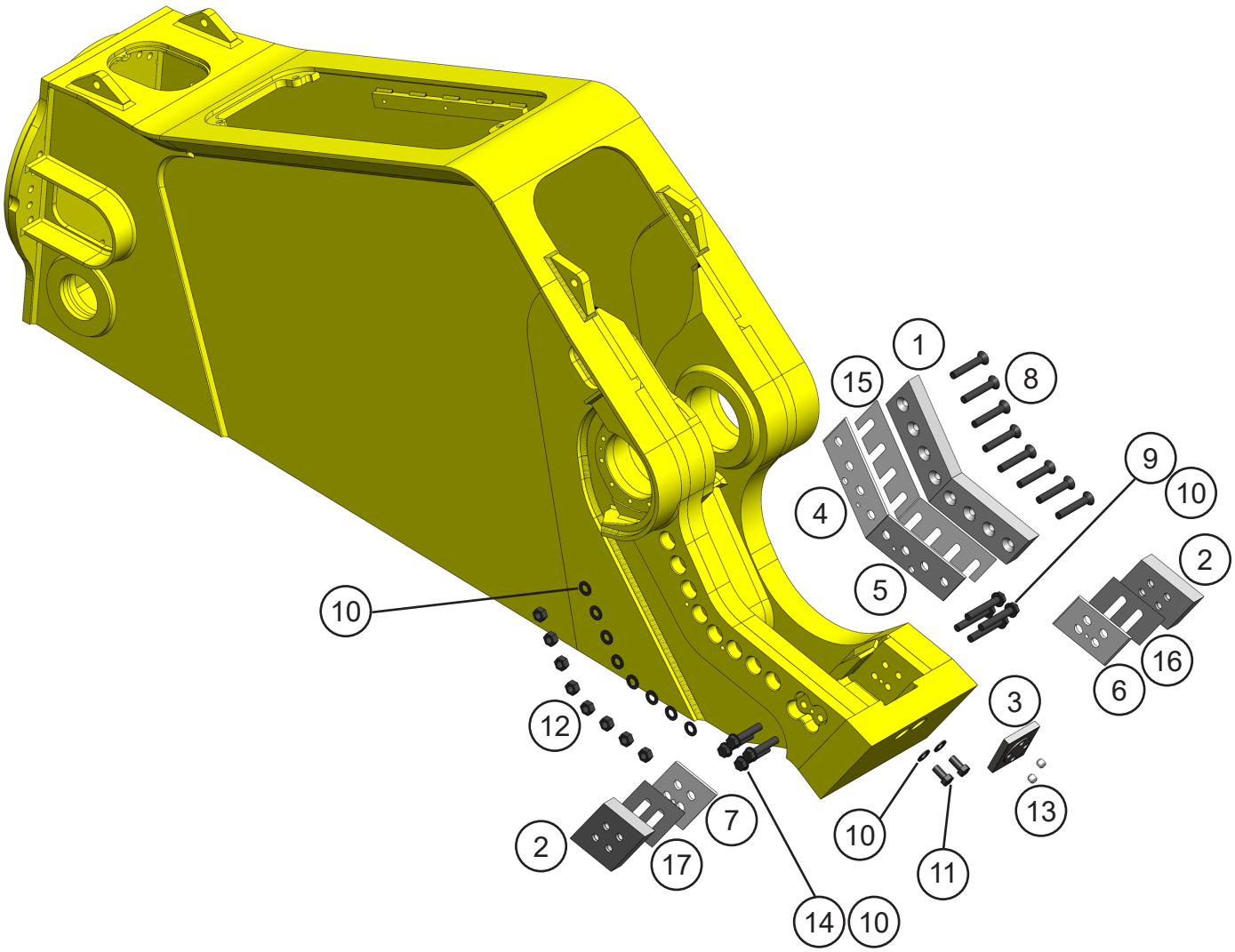

© 2026 Genesis Attachments, LLC

ASSEMBLY LOWER BLADES

ITEM	QTY	PART NUMBER	DESCRIPTION
1	2	1102512	Mach Blade
2	2	1105722	Mach Blade Guide
3	1	1101957	Mach Blade Razor
4	1	1104579	Mach Adjust Plate Primary
5	1	1104578	Mach Adjust Plate Secondary
6	1	1105865	Mach Guide Blade Adjust Plate - Blade Side
7	1	1105867	Mach Guide Blade Adjust Plate - Guide Side
8	8	F0510600	Flat Head Capscrew 1 - 8 x 6
9	4	F0210600	Hex Head Capscrew 1 - 8 x 6
10	18	F1300100	Flat Washer Narrow 1”
11	2	F0210200	Hex Head Capscrew 1 - 8 x 2
12	8	F0910008	Hex Nut 1 - 8
13	2	F2510100	Set Screw Socket Head 1 - 8 x 1
14	4	F0210500	Hex Head Capscrew 1 - 8 x 5
15		1104648	Blade Shim Set
16		1105724	Guide Shim Set, Blade Side
17		1105725	Guide Shim Set, Guide Side

© 2026 Genesis Attachments, LLC

ASSEMBLY UPPER BLADES

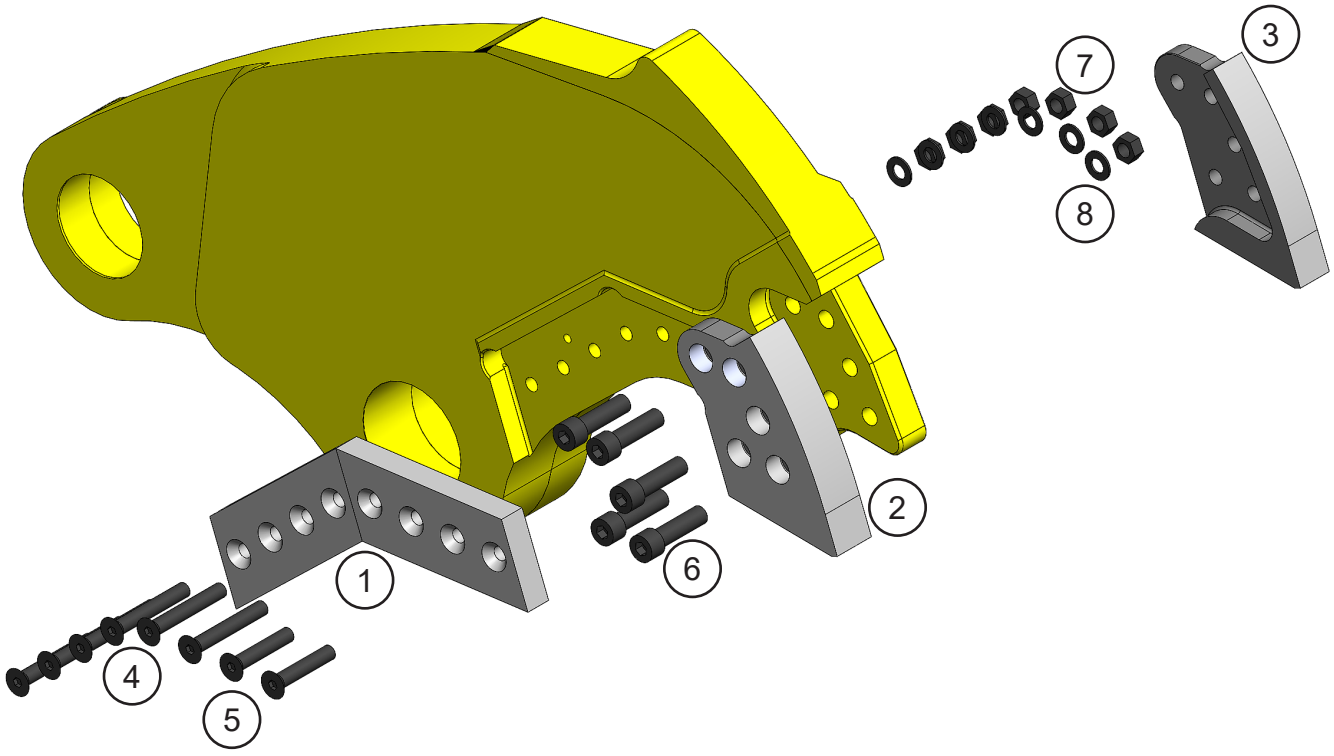

© 2026 Genesis Attachments, LLC

ASSEMBLY UPPER BLADES

ITEM	QTY	PART NUMBER	DESCRIPTION
1	2	1102512	Mach Blade
2	1	1105840	Mach Blade Tip Right
3	1	1105841	Mach Blade Tip Left
4	6	F0510700	Flat Head Capscrew 1 - 8 x 7
5	2	F0510550	Flat Head Capscrew 1 - 8 x 5½
6	5	1102857	Mach Bolt Socket Head Capscrew 1¼ - 7 x 4½ Custom
7	8	F0910008	Hex Nut 1 - 8
8	8	F1300100	Flat Washer Narrow 1”

© 2026 Genesis Attachments, LLC

ASSEMBLY AUTO GUIDE

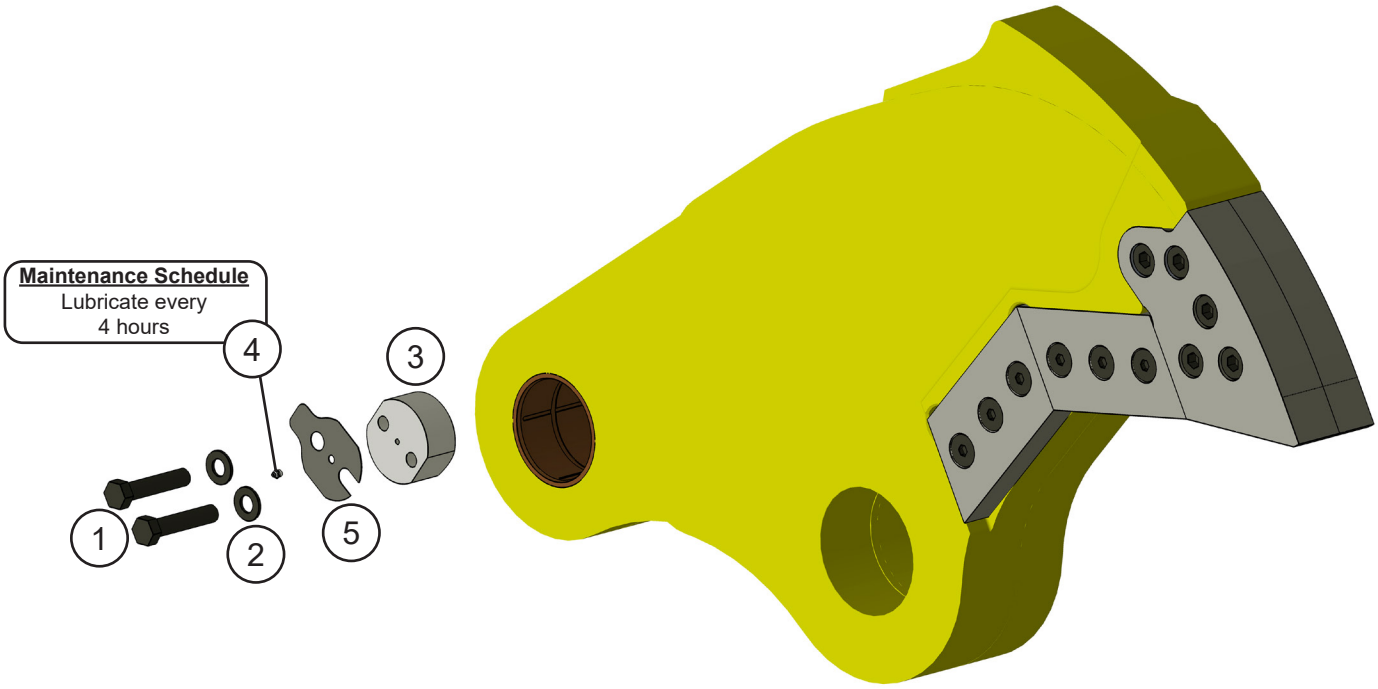

© 2026 Genesis Attachments, LLC

ASSEMBLY AUTO GUIDE

ITEM	QTY	PART NUMBER	DESCRIPTION
1	2	F0210500	Hex Head Capscrew 1 - 8 x 5.00
2	2	F1300100	Flat Washer Narrow 1”
3	1	*	Mach Auto Guide
4	1	6200002	Grease Fitting
5	1	1106478	Shim Set, Auto Guide

* Part number is Serial Number specific. For replacement parts call the Genesis Parts Department.

USA
715-395-3488

Europe
+49 83 31 9 25 98 0

© 2026 Genesis Attachments, LLC

ASSEMBLY CYLINDER PINS

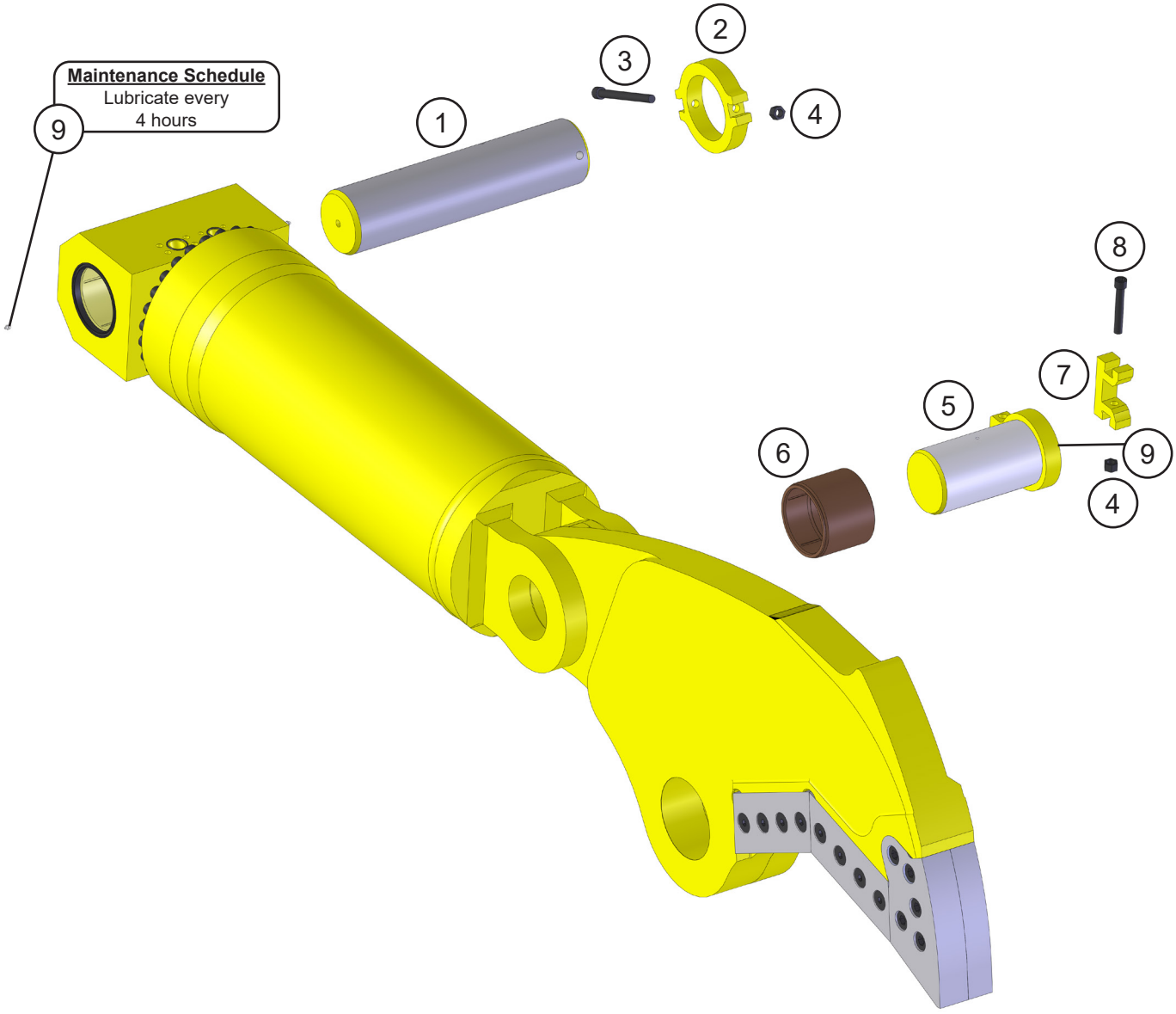

© 2026 Genesis Attachments, LLC

ASSEMBLY CYLINDER PINS

ITEM	QTY	PART NUMBER	DESCRIPTION
1	1	1106674	Mach Rear Cyl Pin
2	1	1106675	Mach Pin Keeper Rear
3	1	F0620230	Socket Head Capscrew M20 x 2.50 x 230
4	2	F1020250	Nylock Hex Nut M20 x 2.50
5	1	1106672	Wldt Front Cyl Pin
6	1	1106664	Mach Bearing Upper Cylinder Connection
7	1	1102487	Mach Pin Keeper (Clevis)
8	1	F0620130	Socket Head Capscrew M20 x 2.50 x 130
9	2	6200002	Grease Fitting

© 2026 Genesis Attachments, LLC

ASSEMBLY ACCESS COVERS

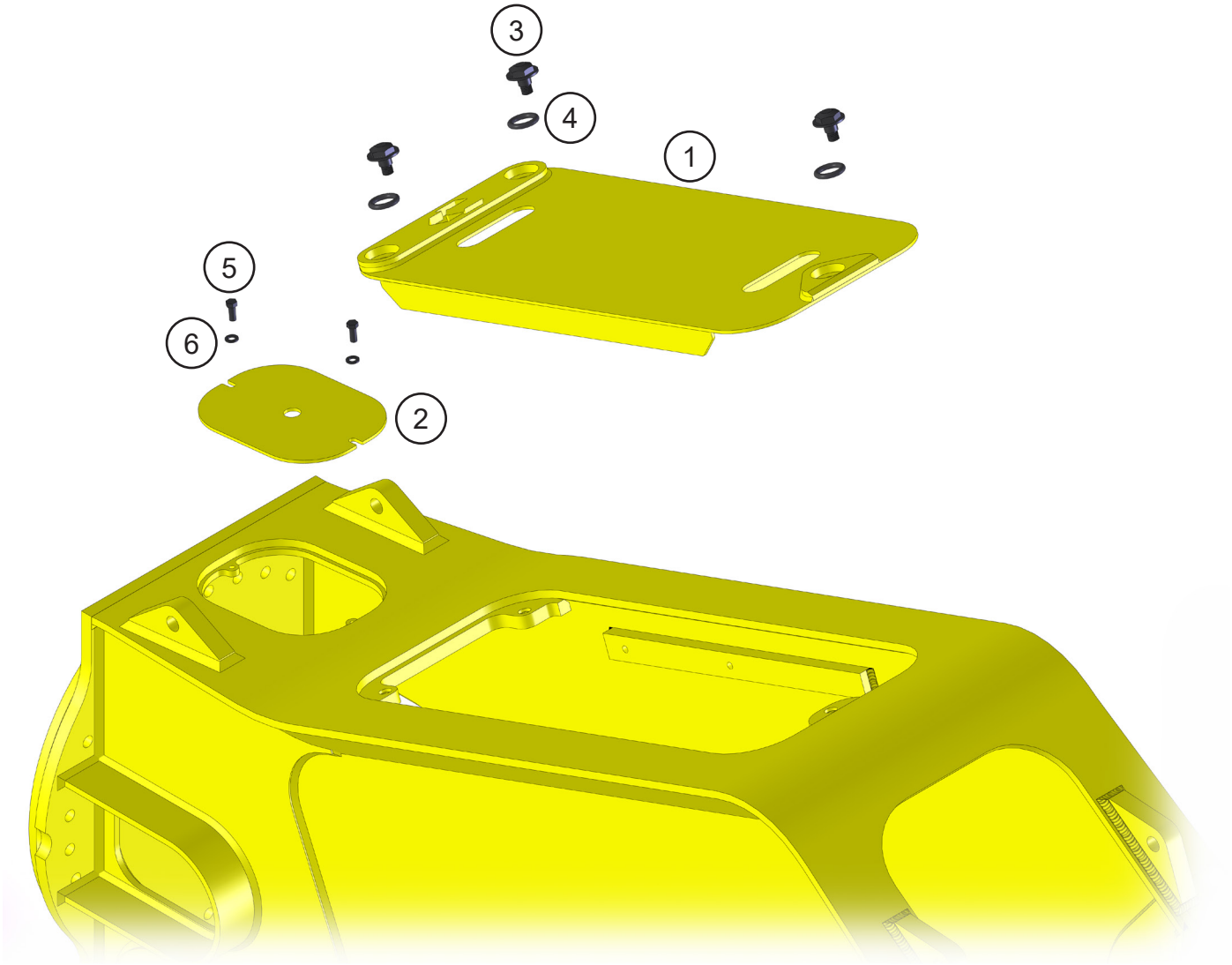

© 2026 Genesis Attachments, LLC

ASSEMBLY ACCESS COVERS

ITEM	QTY	PART NUMBER	DESCRIPTION
1	1	1108105	Wldt Cover
2	1	1107838	Wldt Cover
3	3	1105854	Mach Flange Shoulder Bolt
4	3	6301112	O-Ring
5	2	F0112030	Hex Head Capscrew M12 x 1.75 x 30
6	2	F1201224	Flat Washer M12

© 2026 Genesis Attachments, LLC

ASSEMBLY UPPER HEAD

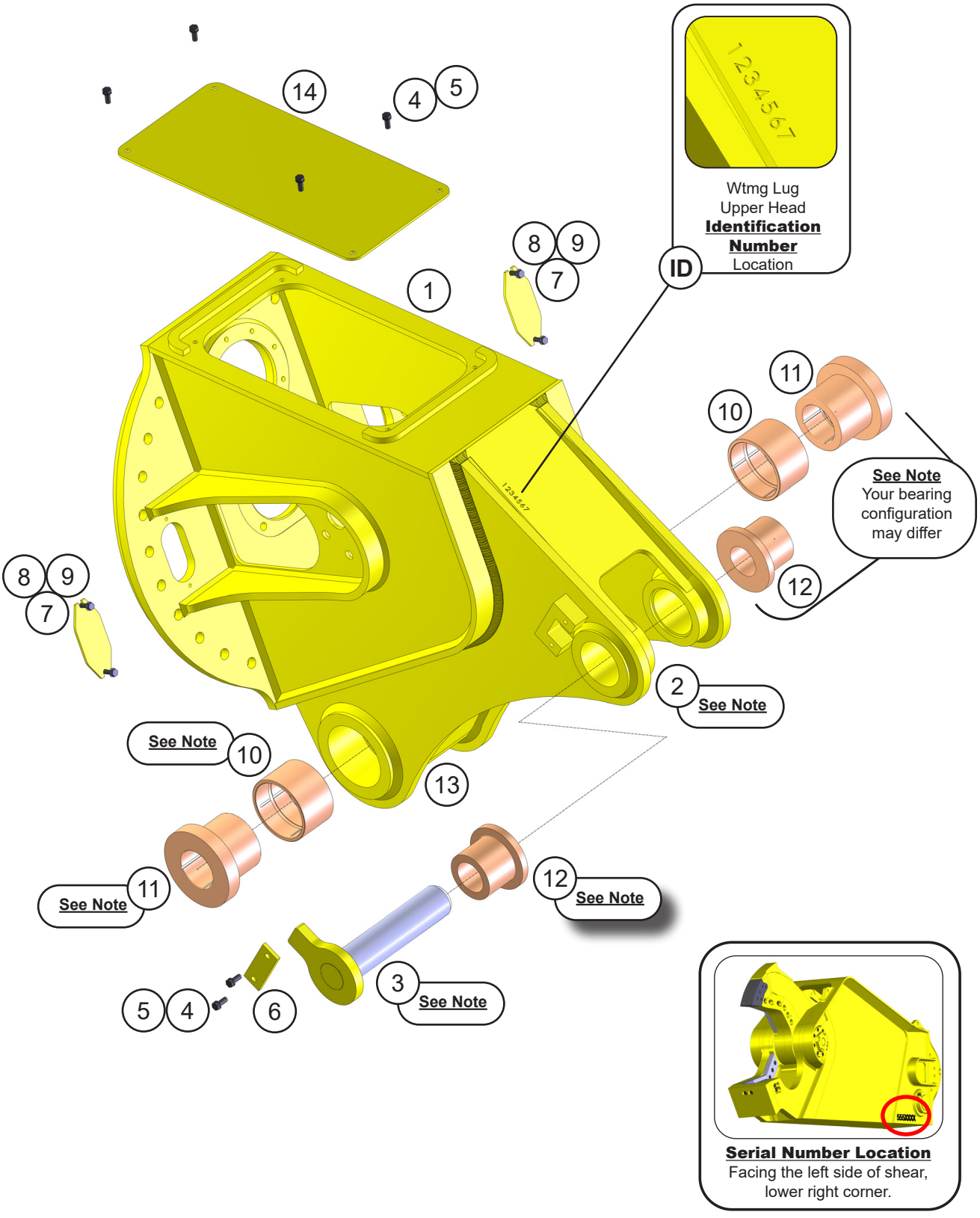

© 2026 Genesis Attachments, LLC

ASSEMBLY UPPER HEAD

ITEM	QTY	PART NUMBER	DESCRIPTION
1	1	5513129	Wtmg Sub Head
2	1	*	Wtmg Lug Upper Head
3	1	*	Wldt Pin
4	6	F0112030	Hex Head Capscrew M12 x 1.75 x 30
5	6	F1401200	Lock Washer M12
6	1	5500752	Plt Strap
7	2	1105883	Plt Bolt Cover
8	4	F0110030	Hex Head Capscrew M10 x 1.50 x 30
9	4	F1201021	Flat Washer M10
10	2	*	Mach Bearing
11	2	*	Mach Boom Bearing
12	2	*	Mach Spacer Sleeve
13	1	6200002	Grease Fitting
14	1	5513200	Plt Sub Head Cover

* Part numbers are Serial Number specific. For replacement parts call the Genesis Parts Department.

USA
715-395-3488

Europe
+49 83 31 9 25 98 0

© 2026 Genesis Attachments, LLC

ASSEMBLY ROTATION - PISTON MOTOR

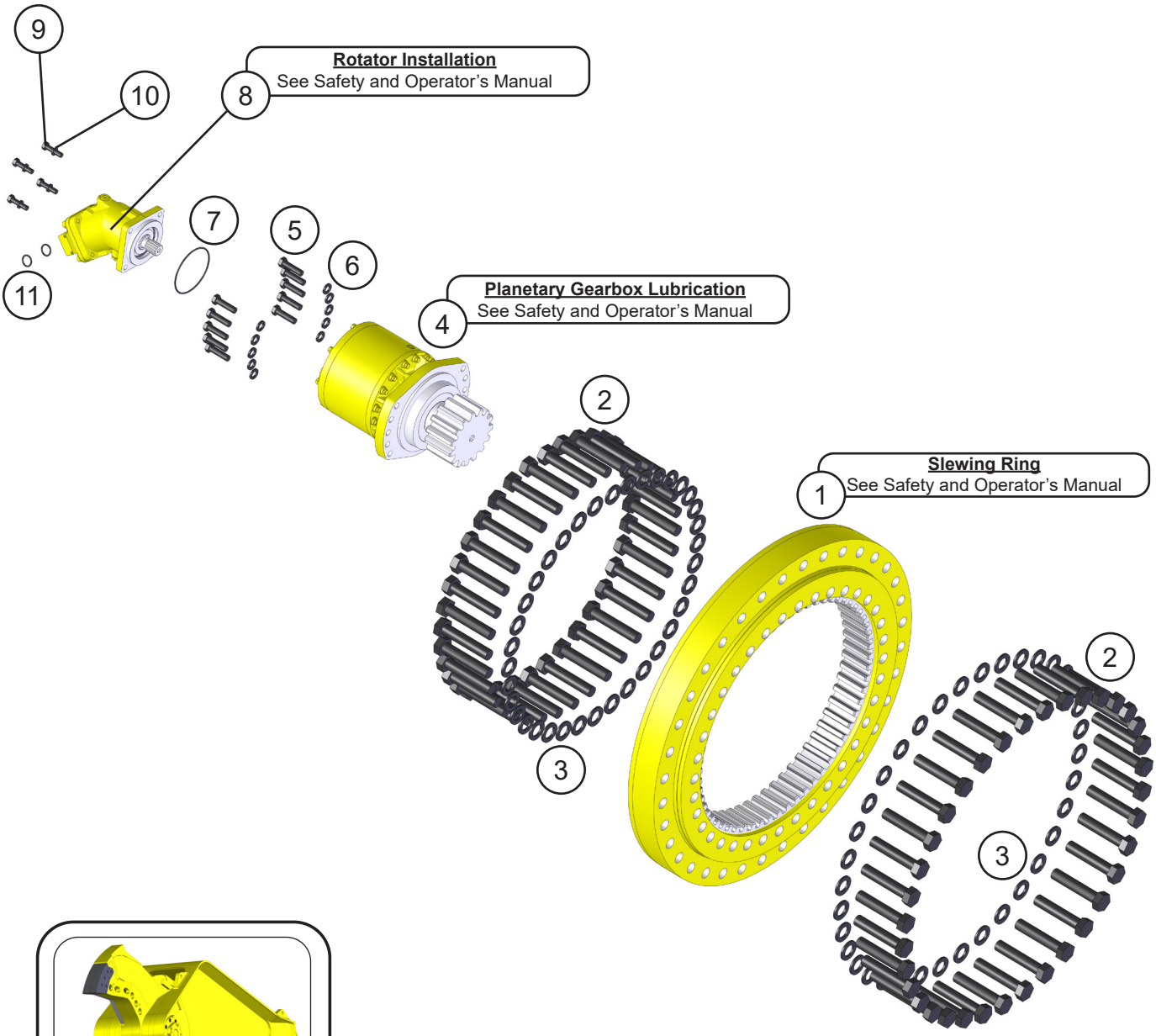



Serial Number Location
Facing the left side of shear, lower right corner.

© 2026 Genesis Attachments, LLC

ASSEMBLY ROTATION - PISTON MOTOR

ITEM	QTY	PART NUMBER	DESCRIPTION
1	1	6300430	Bearing Slewing
2	71	F0130150	Hex Head Capscrew M30 x 3.5 x 150
3	71	F2803000	Hytorc Reaction Washer M30
4	1	6300446	Gear Box
5	10	F0116060	Hex Head Capscrew M16 x 2.0 x 60
6	10	F1900063	Wedge Lock Washer ⅝
7	1	S0190250	O-Ring (90 Durometer -250)
8	1	6340012	Motor
9	4	F0250150	Hex Head Capscrew ½ - 13 x 1½
10	4	F1900050	Wedge Lock Washer ½
11	2	S0190214	O-Ring (90 Durometer -214)

© 2026 Genesis Attachments, LLC

ASSEMBLY ROTATION CIRCUIT - PISTON MOTOR

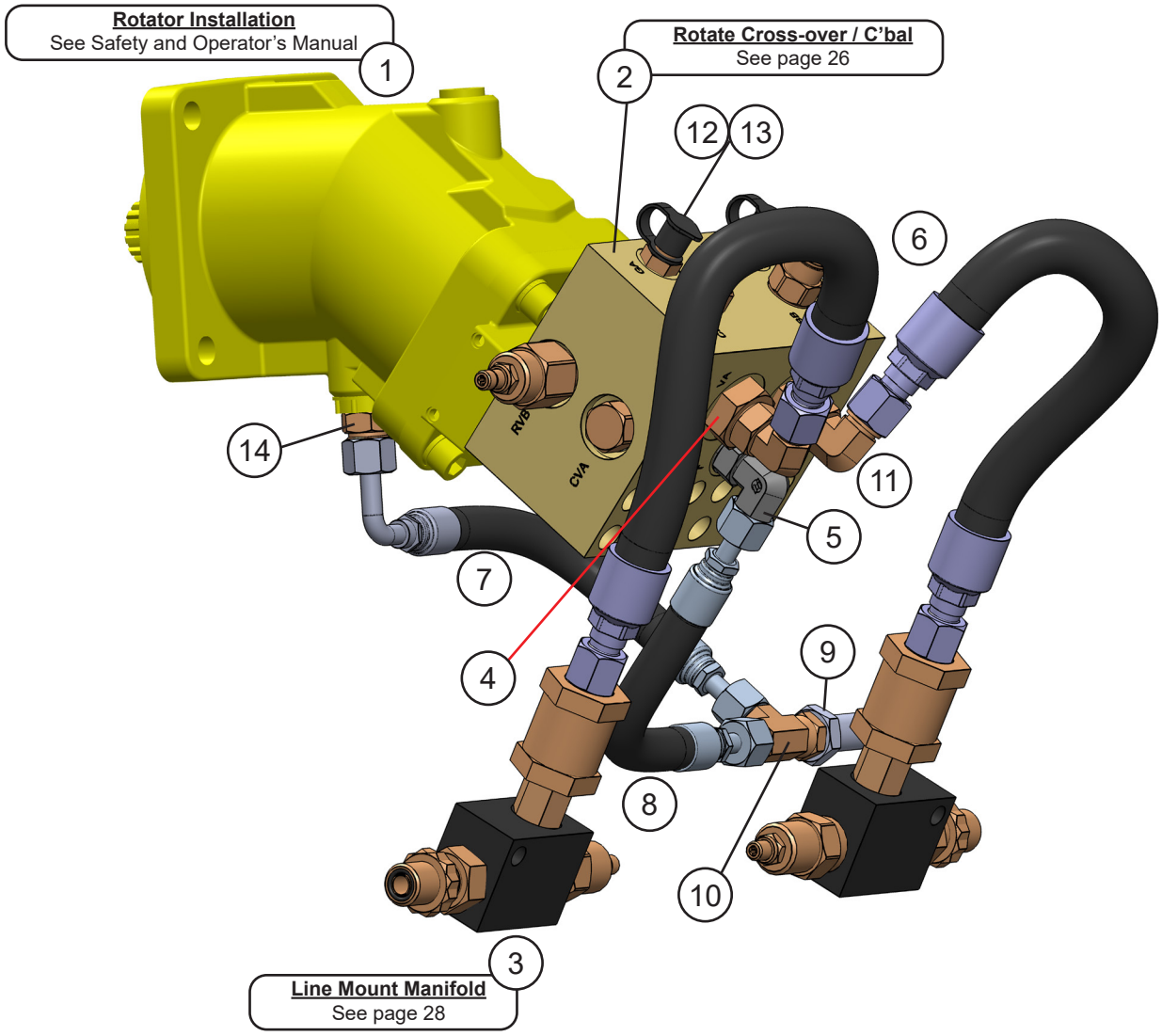

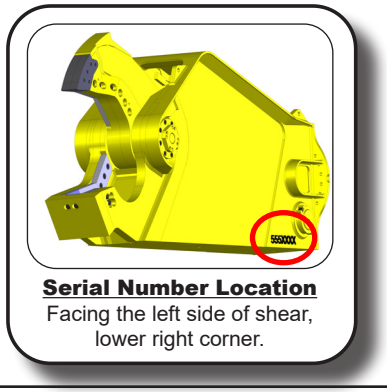

Serial Number Location
Facing the left side of shear, lower right corner.

© 2026 Genesis Attachments, LLC

ASSEMBLY ROTATION CIRCUIT - PISTON MOTOR

ITEM	QTY	PART NUMBER	DESCRIPTION
1	1	See page 22	Assembly Rotation
2	1	See page 26	Sub-Assembly Rotate Cross-over/C'bal
3	2	See page 28	Sub-Assembly Line Mount Manifold
4	2	6300512	Adaptor 12MB - 08FB
5	1	6310204	Adaptor 06MO-08MB-90
6	2	1106466	Hose
7	1	1106465	Hose
8	1	1108257	Hose
9	1	6310149	Adaptor Bulkhead 06MO-06MO
10	1	6300407	Adaptor Run Tee 06FOX-06MO-06MO
11	2	6300303	Adaptor 08MB-08MO-90
12	2	6300014	Diagnostic Nipple 06MB
13	2	6310001	Diagnostic Nipple Dust Cap
14	1	6300148	Adaptor 06MO-08MB

© 2026 Genesis Attachments, LLC

SUB-ASSEMBLY ROTATE CROSS-OVER / C'BAL

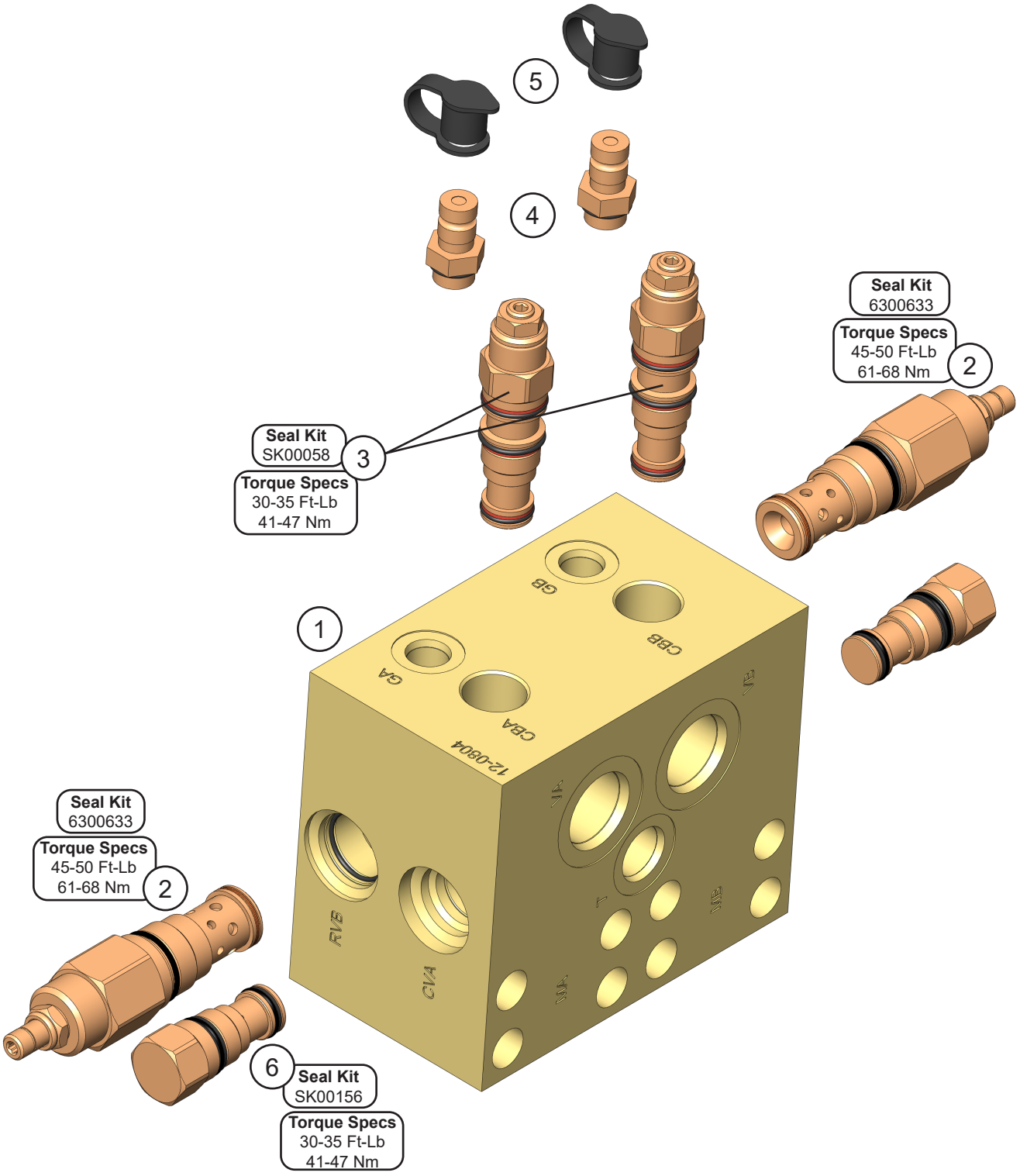

© 2026 Genesis Attachments, LLC

SUB-ASSEMBLY ROTATE CROSS-OVER / C'BAL

ITEM	QTY	PART NUMBER	DESCRIPTION	
1	1	6380079	Valve Block	
2	2	6301241	Valve Relief	**Seal Kit 6300633**
3	2	6380213	Valve Counterbalance	**Seal Kit 6300622**
4	2	6300014	Diagnostic Nipple 06MB	
5	2	6310001	Diagnostic Nipple Dust Cap	
6	2	6360088	Valve Check	**Seal Kit SK00156**

© 2026 Genesis Attachments, LLC

SUB-ASSEMBLY LINE MOUNT MANIFOLD

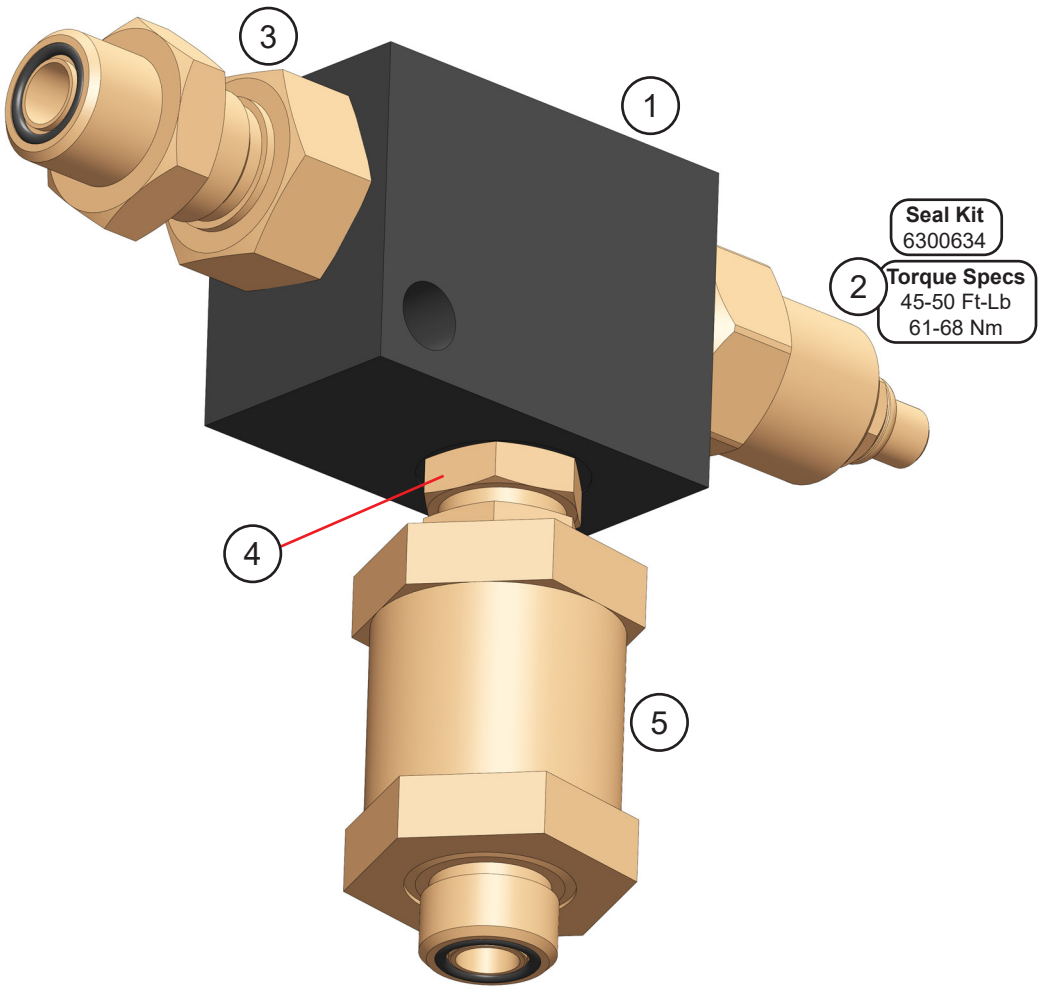

© 2026 Genesis Attachments, LLC

SUB-ASSEMBLY LINE MOUNT MANIFOLD

ITEM	QTY	PART NUMBER	DESCRIPTION	
1	1	6300609	Valve Line Body	
2	1	6300361	Valve Flow Control	**Seal Kit 6300634**
3	1	6300497	Adaptor Bulkhead 08MB-08MO	
4	1	6310183	Adaptor 08MB-08MB	
5	1	6300364	Filter	

© 2026 Genesis Attachments, LLC

ASSEMBLY OPEN AND CLOSE CIRCUIT

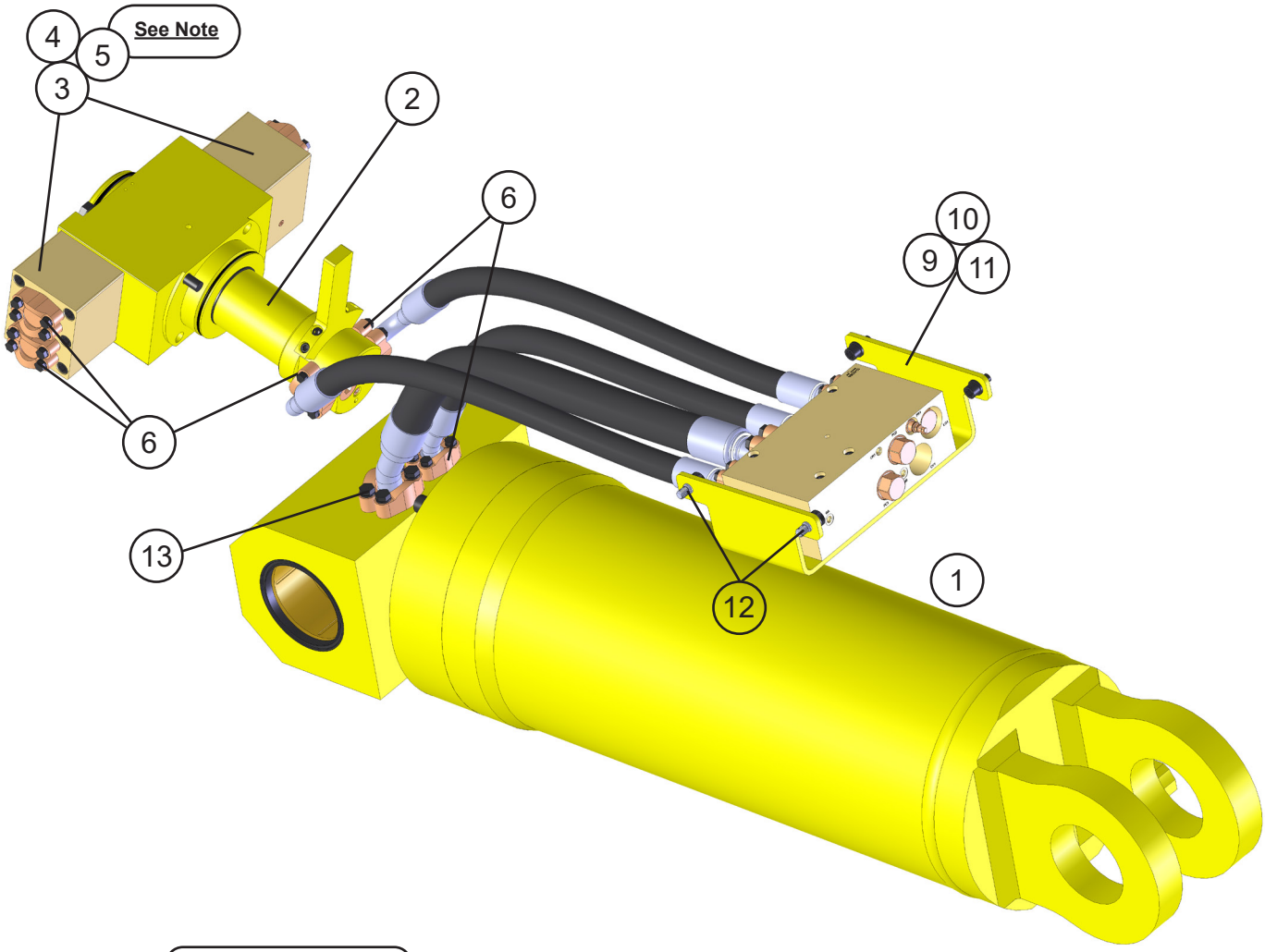

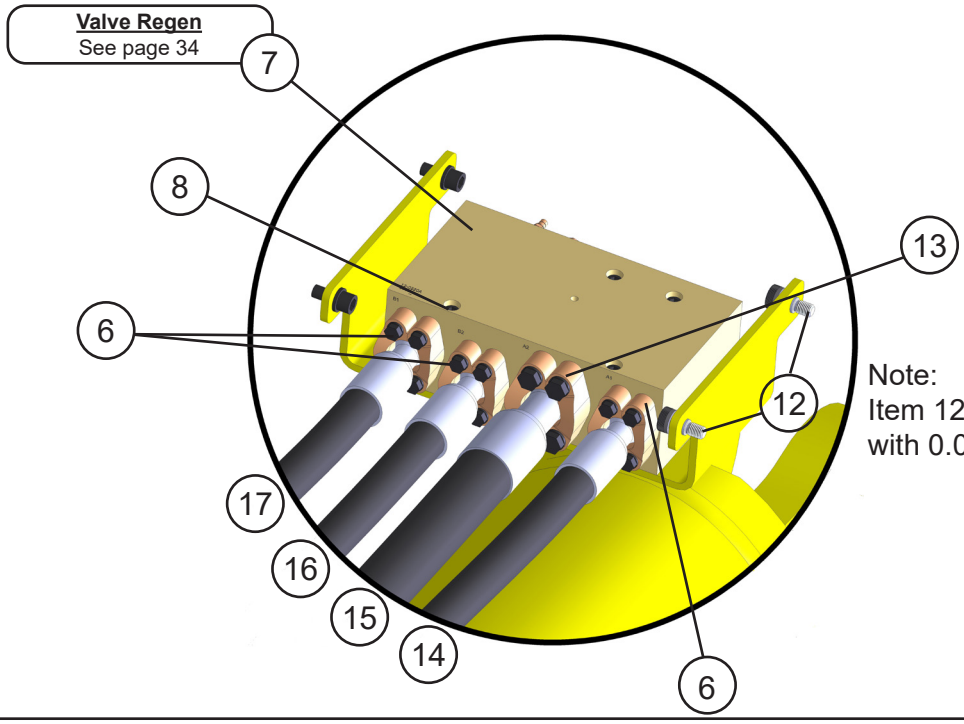

Note:
Item 12 is tied together with 0.032” lock wire.

© 2026 Genesis Attachments, LLC

ASSEMBLY OPEN AND CLOSE CIRCUIT

ITEM	QTY	PART NUMBER	DESCRIPTION
1	1	*	Assembly Cylinder B15.0 R9.5 S34.50
2	1	See page 32	Assembly Swivel Manifold
3	2	*	Mach Port Block
4	12	*	Socket Head Capscrew M16 x 2.00
5	4	*	O-Ring
6	10	**1-1/4" Split Flange Kit**	
	2	H0262125	Split Flange Half 1.25 Code 62
	4	F0112050	Hex Head Capscrew M12 x 1.75 x 50
	4	F1401200	Lock Washer M12
	1	S0190222	O-Ring
7	1	See page 34	Valve Regen
8	4	F0612120	Socket Head Capscrew M12 x 1.75 x 120
9	1	1106677	Mach Plt Frmd Valve Tray
10	2	F0616035	Socket Head Capscrew M16 x 2 x 35
11	2	F1201630	Flat Washer M16
12	2	F3616020	Socket Head Shoulder Screw M16 x 2 x 20
13	2	**1-1/2" Split Flange Kit**	
	2	H0262150	Split Flange Half 1.50 Code 62
	4	F0116060	Hex Head Capscrew M16 x 2.00 x 60
	4	F1401628	Lock Washer M16
	1	S0190225	O-Ring
14	1	1106680	Hose
15	1	1106682	Hose
16	1	1106681	Hose
17	1	1106679	Hose

* Part numbers are Serial Number specific. For replacement parts call the Genesis Parts Department.

USA
715-395-3488

Europe
+49 83 31 9 25 98 0

© 2026 Genesis Attachments, LLC

ASSEMBLY SWIVEL MANIFOLD

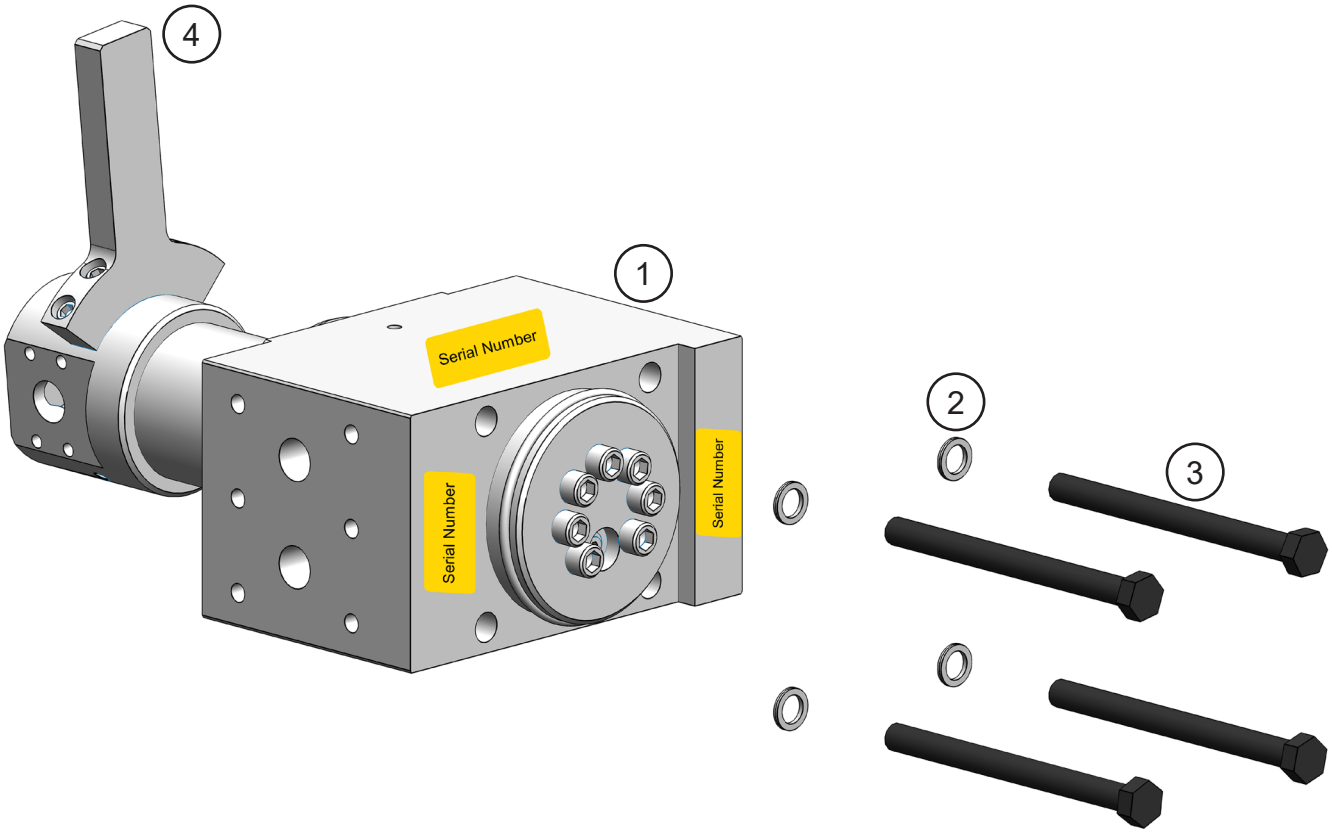

© 2026 Genesis Attachments, LLC

ASSEMBLY SWIVEL MANIFOLD

ITEM	QTY	PART NUMBER	DESCRIPTION
1	1	*	Assembly Swivel Manifold
2	4	F1900075	Wedge Lock Washer ¾
3	4	F0120250	Hex Head Capscrew M20 x 2.5 x 250
4	1	*	Torque Arm Kit

* Part numbers are Serial Number specific.
For replacement parts and seal kit, call the Genesis Parts Department.
The swivel Serial Number, located in one of the three highlighted areas, is required for **any** parts order.

USA
715-395-3488

Europe
+49 83 31 9 25 98 0

© 2026 Genesis Attachments, LLC

REGEN BLOCK SUB-ASSEMBLY - 6360021

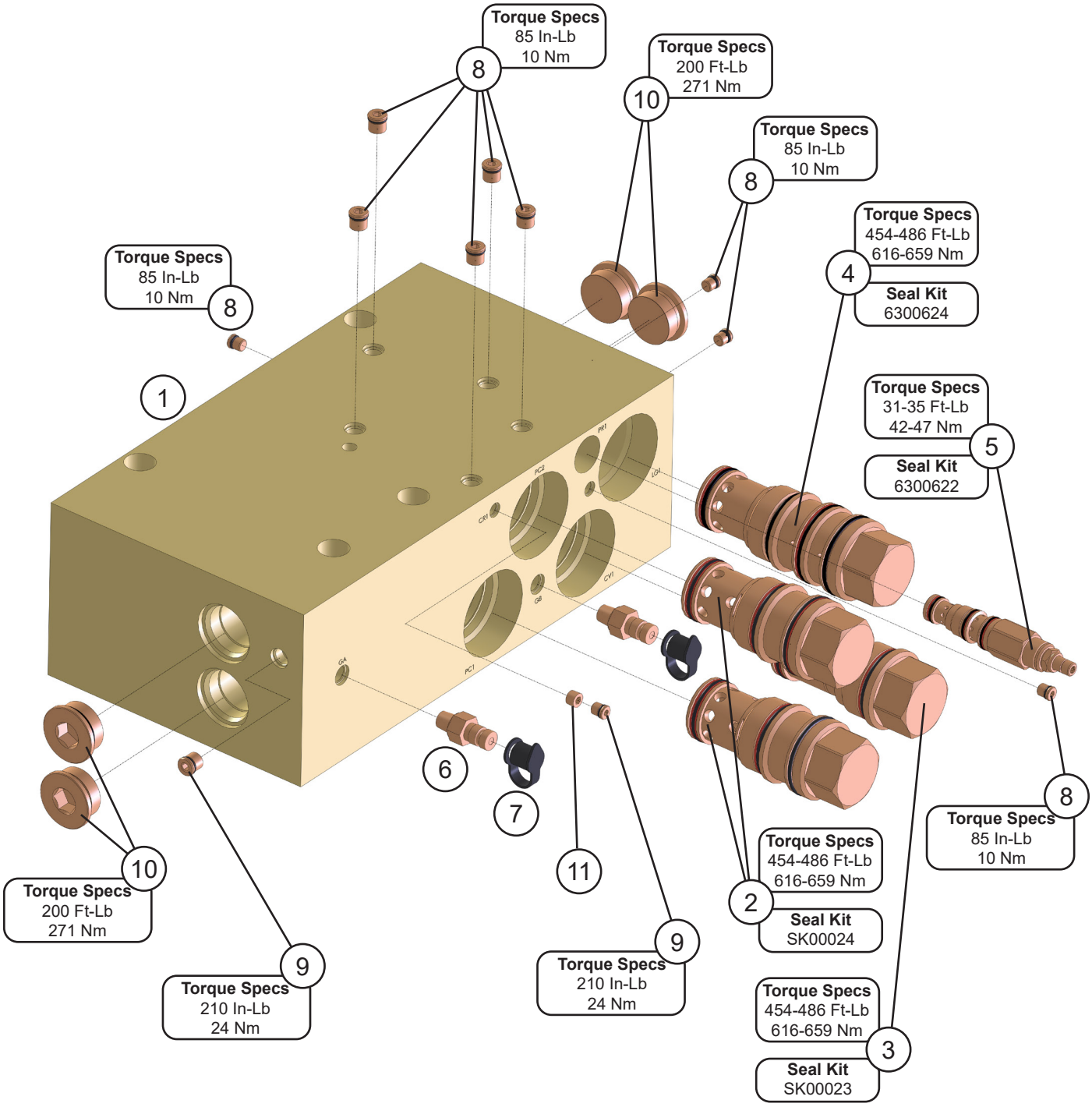

© 2026 Genesis Attachments, LLC

REGEN BLOCK SUB-ASSEMBLY - 6360021

ITEM	QTY	PART NUMBER	DESCRIPTION	
1	1	6360021	Manifold Block	**Seal Kit SK00129**
2	2	6300061	Pilot to Close Check Valve	**Seal Kit SK00024**
3	1	6380011	Check Valve	**Seal Kit SK00023**
4	1	6300623	Logic Element	**Seal Kit 6300624**
5	1	6300625	Pressure Reducing Valve	**Seal Kit 6300622**
6	2	6300365	Diagnostic Nipple	
7	2	6310001	Diagnostic Nipple Dust Cap	
8	9	6300075	Plug Socket Head 02MB	
9	2	6300076	Plug Socket Head 04MB	
10	4	6300078	Plug Socket Head 16MB	
11	1	6300903	Plug Pipe Orifice 01MP 1/16-27 NPT	

© 2026 Genesis Attachments, LLC

ASSEMBLY SLEWING RING LUBRICATION

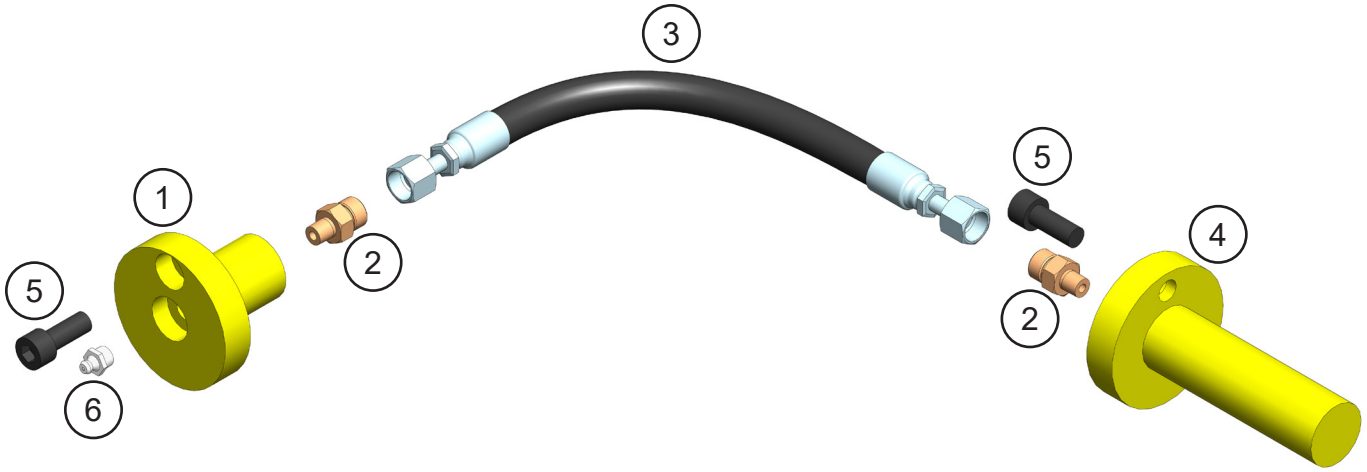

© 2026 Genesis Attachments, LLC

ASSEMBLY SLEWING RING LUBRICATION

ITEM	QTY	PART NUMBER	DESCRIPTION
1	1	5512411	Mach Grease Bulkhead Adaptor
2	2	6300731	Adaptor 02MP-04MO
3	1	1105888	Assy Hose 0° x 0° 4M2T
4	1	5512419	Mach Slewing Ring Grease Adaptor
5	2	F0610035	Socket Head Capscrew M10 x 1.50 x 35
6	1	6200002	Grease Fitting

© 2026 Genesis Attachments, LLC

BOLT TORQUE SPECIFICATIONS

Reference the product Thread Treatment Diagrams on page 39 to determine whether to use wet or dry torque values for specific bolts.

Reference Procedures on page 40 for threadlocker or anti-seize application and bolt and bolt hole cleaning.

Prior to torquing, clean all bolt holes, bolts and nuts to remove dirt, grease and oil, and identify bolt type.

Never re-torque bolts that use Loctite. If a bolt becomes loose or damaged after the initial use when Loctite was applied and the bolt was torqued, the bolt must be replaced.

Never break tightened bolts loose with a torque wrench. Doing so may break the torque wrench or take it out of calibration.

Torque wrenches should be calibrated on an annual basis.

When using a torque multiplier with a torque wrench, incorrect settings will be multiplied by the ratio of the torque wrench.

Never use an impact driver on a torque multiplier.

© 2026 Genesis Attachments, LLC

THREAD TREATMENT DIAGRAM

Mobile Shears

Use this diagram to determine what thread treatment, if any, is required for each fastener.
For thread treatment application procedures, see page 40. For prescribed torque values, see page 42.

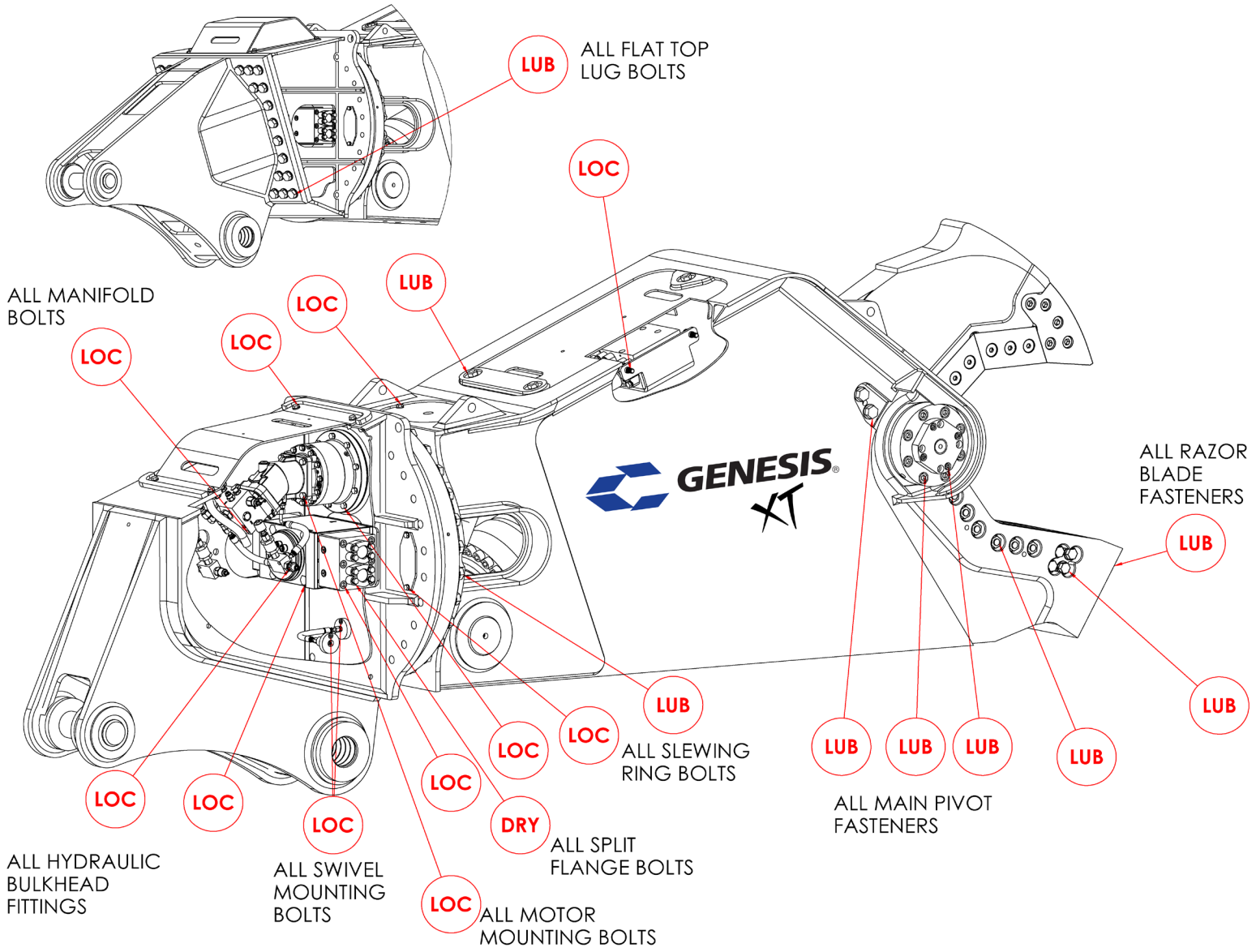

© 2026 Genesis Attachments, LLC

PROCEDURES

Reference the product Thread Treatment Diagrams on page 39 to determine which of the following procedures is required.

Cleaning

To ensure proper performance of thread treatment and accurate torque values, clean and degrease **all internal and external threads** prior to application of threadlocker, anti-seize or primer and before installation of hardware.

- Ensure both internal and external threads are free of dirt or debris.
- Use brake cleaner or similar cleaning solvent on all threads to remove any grease or oil.
- Allow threads to dry.

NOTICE

Failure to properly clean threads will cause threadlocker, primer, and/or anti-seize to not properly cure!

LOC

Threadlocker

For bolted connections requiring threadlocker, use **Loctite 263** or equivalent applied using the following procedure:

- Clean and degrease all threads.
- For thru holes or nuts, apply threadlocker to bolt threads.
- For blind holes, apply stripe of threadlocker along the length of the hole (applying to the bolt can cause escaping air to remove threadlocker as the bolt is inserted).
- Torque bolt to specified **Wet Torque Value**, see page 42.

Threadlocker

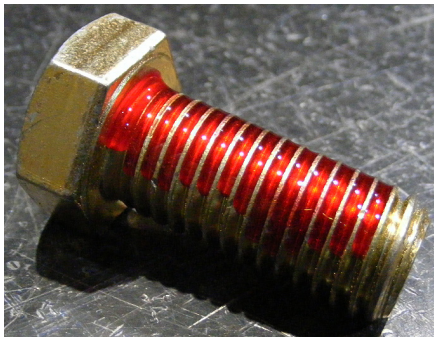

Blind Hole

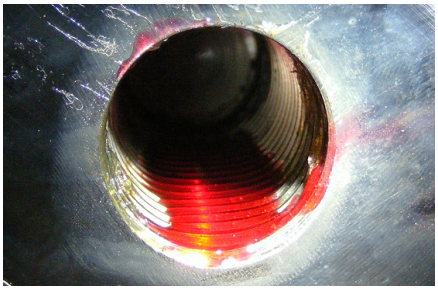

For threaded hydraulic fitting connections, use **Loctite 5452** or equivalent thread sealant in conjunction with **Loctite 7471** primer using the following procedure:

- Clean and degrease all threads.
- Apply Loctite 7471 primer to both external and internal threads and allow to dry.
- Apply threadlocker to 360 degrees of the threads on the male fitting, ensuring adequate coverage.
- Assemble fitting per directions in operator's manual.
- For O-ring boss and flat face O-ring connections, torque fittings to values specified on page 43.

Hydraulic Fitting



© 2026 Genesis Attachments, LLC

PROCEDURES

LUB

Anti-Seize

For bolted connections requiring anti-seize lubrication, use **Loctite LB8008** or equivalent using the following procedure:

- Clean and degrease all threads.
- Apply thin coat of anti-seize to internal and external threads and under bolt head and/or nut, ensuring complete coverage.
- Torque bolt to specified **Wet Torque Value**, see page 42.

Anti-Seize



DRY

No Thread Treatment

- Clean and degrease all threads.
- Torque bolt to specified **Dry Torque Value**, see page 42.

© 2026 Genesis Attachments, LLC

BOLT TORQUE SPECIFICATIONS

Dry Torque Values

		Hex/Socket Head		Flat Head	
Fastener Grade	**Size x Pitch**	**Nm**	**Ft-lb**	**Nm**	**Ft-lb**
CL 10.9	M8 x 1.25	35	26	27	20
	M10 x 1.50	71	53	58	42
	M12 x 1.75	124	92	101	73
	M14 x 1.50	200	148	163	118
	M14 x 2.00	200	148	163	118
	M16 x 2.00	311	230	254	184
	M20 x 1.50	610	450	498	360
	M20 x 2.50	608	449	497	359
	M24 x 3.00	1054	778	861	622
	M27 x 3.00	1543	1138	1260	910
	M30 x 3.50	2095	1545	1712	1236
	M36 x 4.00	3659	2699	2991	2159
8	1/4-20	14	11	11	8
	5/16-18	32	24	26	19
	3/8-16	59	44	48	35
	7/16-14	94	70	77	56
	1/2-13	143	106	116	84
	1/2-20	162	120	133	96
	5/8-11	287	212	234	169
	3/4-10	509	376	415	300
	7/8-9	821	606	670	484
	1.00-8	1232	909	1007	727
	1.00-14	1383	1020	1130	816
	1.25-7	2463	1817	2013	1453
8/L9	1.50-6	4287	3162	3504	2529

Wet Torque Values

		Hex/Socket Head		Flat Head	
Fastener Grade	**Size x Pitch**	**Nm**	**Ft-lb**	**Nm**	**Ft-lb**
CL 10.9	M8 x 1.25	29	22	23	17
	M10 x 1.50	61	45	49	36
	M12 x 1.75	105	78	85	62
	M14 x 1.50	150	111	121	88
	M14 x 2.00	170	126	138	100
	M16 x 2.00	265	196	216	156
	M20 x 1.50	456	337	372	269
	M20 x 2.50	517	382	422	305
	M24 x 3.00	894	660	731	528
	M27 x 3.00	1312	968	1072	774
	M30 x 3.50	1779	1312	1453	1049
	M36 x 4.00	3110	2294	2542	1835
8	1/4-20	13	10	11	8
	5/16-18	27	20	22	16
	3/8-16	50	37	40	29
	7/16-14	80	59	65	47
	1/2-13	122	90	99	72
	1/2-20	138	102	112	81
	5/8-11	244	180	199	144
	3/4-10	433	320	354	256
	7/8-9	698	515	570	412
	1.00-8	1046	772	854	617
	1.00-14	1175	867	960	693
	1.25-7	2095	1545	1712	1236
8/L9	1.50-6	3644	2688	2979	2150

© 2026 Genesis Attachments, LLC

O-RING BOSS & FLAT FACE O-RING TORQUE SPECIFICATIONS

O-Ring Boss Torque Values		
Size Dash	**Nm**	**Ft-lb**
-4	22	16
-5	27	20
-6	36	26
-8	83	60
-10	110	80
-12	187	135
-14	249	180
-16	304	220
-20	387	280
-24	498	360

Flat Face O-Ring Torque Values		
Size Dash	**Nm**	**Ft-lb**
-4	18	13
-6	30	22
-8	60	44
-10	85	62
-12	121	88
-14	121	88
-16	160	116
-20	213	154
-24	274	198

© 2026 Genesis Attachments, LLC

BOLT DRIVE SPECIFICATIONS

Thread Size x Pitch	Hex Head 	Socket Head 	Flat Head 
	Wrench/Drive Size		
M8 x 1.25	13mm	6mm	5mm
M10 x 1.50	17mm	8mm	6mm
M12 x 1.75	19mm	10mm	8mm
M14 x 1.50	22mm	12mm	10mm
M14 x 2.00	22mm	12mm	10mm
M16 x 2.00	24mm	14mm	10mm
M20 x 1.50	30mm	17mm	12mm
M20 x 2.50	30mm	17mm	12mm
M24 x 3.00	36mm	19mm	14mm
M27 x 3.00	41mm	19mm	-
M30 x 3.50	46mm	22mm	-
M36 x 4.00	55mm	27mm	-
1/4-20	7/16"	3/16"	5/32"
5/16-18	1/2"	1/4"	3/16"
3/8-16	9/16"	5/16"	7/32"
7/16-14	5/8"	3/8"	1/4"
1/2-13	3/4"	3/8"	5/16"
1/2-20	3/4"	3/8"	5/16"
5/8-11	15/16"	1/2"	3/8"
3/4-10	1-1/8"	5/8"	1/2"
7/8-9	1-5/16"	3/4"	9/16"
1.00-8	1-1/2"	3/4"	5/8"
1.00-14	1-1/2"	3/4"	5/8"
1.25-7	1-7/8"	7/8"	7/8"
1.50-6	2-1/4"	1"	1"

© 2026 Genesis Attachments, LLC

WARRANTY

Claim Procedure

Notify the Genesis Service Department of the potential warranty claim prior to making the repair. Digital pictures are very helpful for diagnosing problems and recommending repairs.

Contact the Genesis Service Department before making alterations, changes or repairs to any component that is going to be considered for warranty. Not doing so will void all Genesis warranty consideration.

The Genesis Service Department will issue an authorization number to track the repair costs, outgoing parts, and/or defective parts returning to the factory.

Replacement parts must be ordered using a purchase order number. Shipping is standard ground. Overnight shipping is available by request, and Genesis will not cover the shipping charge.

When the repair is complete, submit an invoice to the Genesis Service Department within 30 days. Include itemized internal labor reporting, parts lists and invoices for outside contractors. Reference the authorization number on all invoices.

When returning parts for warranty consideration, include a copy of any related Genesis paperwork along with any other necessary documentation to ensure proper processing and credit. The Genesis Service Department will provide the necessary forms.

Your account will be credited when the warranty claim is accepted.

Blade Warranty

Standard warranty on blades will only be considered on the first edge, and wear on the edge must be 1/8” radius or less. Genesis does not warranty cutting blades that are cracked or broken from top to bottom (perpendicular to the long edge of the blade). Genesis also does not cover fasteners, the labor to replace wear components or collateral damage, such as blade seats, from broken blades, the piercing blade tang or adjustment plates.

Please direct any questions to the Genesis Service Department: 715-395-5252

© 2026 Genesis Attachments, LLC

PARTS ORDER POLICY AND PROCEDURE

Parts Orders Should Include

- Purchase order number
- Model and serial number of attachment
- Part number and quantity needed
- Shipping and billing address
- Method of shipment or required delivery date

Placing Orders

Orders may be placed by phone or e-mail. To e-mail an order, use the form on the following page or your purchase order form. Contact information is located at the front of this manual.

Part Numbers

Part numbers are listed in a separate Parts Manual or, if included, the Parts section of this manual. Contact the Genesis Parts Department with questions regarding part numbers, availability and pricing.

Shipping

All orders will be shipped best way surface unless an alternate shipping method is requested. Shipping charges are not included in the purchase price of parts.

Invoices

All invoices are due upon receipt. Any accounts with invoices open beyond 60 days are subject to review and may be placed on C.O.D. status without further notice.

Returns

Many unused Genesis parts may be returned with proper documentation. Return shipping is the responsibility of the purchaser. Credit will be issued upon return, less a 25% restocking fee. Documentation is required for credit of returned parts. Contact the Genesis Service Department at 715-395-5252 for an RGA (Return Goods Authorization) number and form. An RGA must accompany every return. Items shipped without an RGA may be returned to sender.

Warranty Returns

All parts returned to Genesis for warranty consideration must be returned with a completed RGA (Return Goods Authorization) provided by the Genesis Service Department. The form needs to be completed in its entirety, including any additional information requested by the Service Department. Return shipping is the responsibility of the sender and will be credited upon claim approval. A determination to accept or deny the claim will be made based upon the information available to Genesis. Warranty on purchased parts other than wear components is 6 months. Genesis does not cover labor costs to replace purchased parts replaced under warranty. There is no warranty period on wear parts or components.

© 2026 Genesis Attachments, LLC

GENESIS®
The Promise of Performance.

PARTS ORDER FORM

Customer: _____ Date: _____

Phone: _____ Contact: _____

Shipping Address: E-mail: _____

_____ Billing Address:

_____ _____

_____ _____

Purchase Order: _____ Shipping Method: _____

Model: _____ Serial Number: _____

Quantity	Part Number	Description	Price

E-mail to the Genesis Parts Department: genesisparts@genesisattachments.com
For assistance, call 715-395-3488

© 2026 Genesis Attachments, LLC

INDEX

1-1/2” Split Flange Kit 31
1-1/4” Split Flange Kit 31
1101646 Mach Thrust Washer 7, 9
1101649 Shim Set Thrust Washer 7, 9
1101957 Mach Blade Razor 11
1102487 Mach Pin Keeper (Clevis) 17
1102512 Mach Blade 11, 13
1102857 Mach Bolt Socket Head Capscrew 1¼ - 7 x 4½ Custom 13
1104578 Mach Adjust Plate Secondary 11
1104579 Mach Adjust Plate Primary 11
1104648 Blade Shim Set 11
1104799 Mach Bearing 7, 9
1105722 Mach Blade Guide 11
1105724 Guide Shim Set, Blade Side 11
1105725 Guide Shim Set, Guide Side 11
1105840 Mach Blade Tip Right 13
1105841 Mach Blade Tip Left 13
1105854 Mach Flange Shoulder Bolt 19
1105865 Mach Guide Blade Adjust Plate - Blade Side 11
1105867 Mach Guide Blade Adjust Plate - Guide Side 11
1105883 Plt Bolt Cover 21
1105888 Assy Hose 0° x 0° 4M2T 37
1106465 Hose 25
1106466 Hose 25
1106478 Shim Set, Auto Guide 15
1106664 Mach Bearing Upper Cylinder Connection 17
1106667 Mach End Cap 7, 9
1106669 Mach Tie Rod Nut 7, 9
1106671 Mach Tie Rod 7
1106672 Wldt Front Cyl Pin 17
1106674 Mach Rear Cyl Pin 17
1106675 Mach Pin Keeper Rear 17
1106677 Mach Plt Frmd Valve Tray 31
1106679 Hose 31
1106680 Hose 31
1106681 Hose 31
1106682 Hose 31
1107838 Wldt Cover 19
1108105 Wldt Cover 19
1108257 Hose 25
5500752 Plt Strap 21
5512411 Mach Grease Bulkhead Adaptor 37
5512419 Mach Slewing Ring Grease Adaptor 37
5513129 Wtmg Sub Head 21
5513200 Plt Sub Head Cover 21
6200002 Grease Fitting 7, 9, 15, 17, 21, 37
6300014 Diagnostic Nipple 06MB 25, 27
6300061 Pilot to Close Check Valve 35
6300075 Plug Socket Head 02MB 35
6300076 Plug Socket Head 04MB 35
6300078 Plug Socket Head 16MB 35
6300148 Adaptor 06MO-08MB 25
6300303 Adaptor 08MB-08MO-90 25
6300361 Valve Flow Control 29
6300364 Filter 29
6300365 Diagnostic Nipple 35
6300407 Adaptor Run Tee 06FOX-06MO-06MO 25
6300430 Bearing Slewing 23
6300446 Gear Box 23
6300497 Adaptor Bulkhead 08MB-08MO 29
6300512 Adaptor 12MB - 08FB 25
6300609 Valve Line Body 29
6300623 Logic Element 35
6300625 Pressure Reducing Valve 35
6300731 Adaptor 02MP-04MO 37
6300903 Plug Pipe Orifice 01MP 1/16-27 NPT 35
6301112 O-Ring 19
6301241 Valve Relief 27
6310001 Diagnostic Nipple Dust Cap 25, 27, 35
6310149 Adaptor Bulkhead 06MO-06MO 25
6310183 Adaptor 08MB-08MB 29
6310204 Adaptor 06MO-08MB-90 25
6340012 Motor 23
6360021 Manifold Block 35
6360088 Valve Check 27
6380011 Check Valve 35
6380079 Valve Block 27
6380213 Valve Counterbalance 27
Assembly Access Covers 5, 18, 19
Assembly Auto Guide 5, 14, 15
Assembly Cylinder B15.0 R9.5 S34.50 31
Assembly Cylinder Pins 5, 16, 17
Assembly Lower Blades 5, 10, 11
Assembly Open and Close Circuit 5, 30, 31
Assembly Pivot Group - Left Side 5, 8, 9
Assembly Pivot Group - Right Side 5, 6, 7
Assembly Rotation 5, 25
Assembly Rotation Circuit 5
Assembly Rotation Circuit - Piston Motor 24, 25
Assembly Rotation - Piston Motor 22, 23
Assembly Slewing Ring Lubrication 5, 36, 37
Assembly Swivel Manifold 5, 31, 32, 33
Assembly Upper Blades 5, 12, 13
Assembly Upper Head 5, 20, 21
Bolt Drive Specifications 44
Bolt Torque Specifications 38, 42
Contact Information 2, 50
F0110030 Hex Head Capscrew M10 x 1.50 x 30 21
F0112030 Hex Head Capscrew M12 x 1.75 x 30 19, 21
F0112050 Hex Head Capscrew M12 x 1.75 x 50 31
F0116060 Hex Head Capscrew M16 x 2.0 x 60 23, 31
F0120250 Hex Head Capscrew M20 x 2.5 x 250 33
F0130150 Hex Head Capscrew M30 x 3.5 x 150 23
F0210200 Hex Head Capscrew 1 - 8 x 2 11
F0210500 Hex Head Capscrew 1 - 8 x 5 11, 15

© 2026 Genesis Attachments, LLC

INDEX

F0210600 Hex Head Capscrew 1 - 8 x 6 11
F0250150 Hex Head Capscrew ½ - 13 x 1½ 23
F0412030 Flat Head Capscrew M12 x 1.75 x 30 7, 9
F0510550 Flat Head Capscrew 1 - 8 x 5½ 13
F0510600 Flat Head Capscrew 1 - 8 x 6 11
F0510700 Flat Head Capscrew 1 - 8 x 7 13
F0610035 Socket Head Capscrew M10 x 1.50 x 35 7, 9, 37
F0612040 Socket Head Capscrew M12 x 1.75 x 40 7, 9
F0612120 Socket Head Capscrew M12 x 1.75 x 120 31
F0616035 Socket Head Capscrew M16 x 2 x 35 31
F0620090 Socket Head Capscrew M20 x 2.50 x 90 7, 9
F0620130 Socket Head Capscrew M20 x 2.50 x 130 17
F0620230 Socket Head Capscrew M20 x 2.50 x 230 17
F0910008 Hex Nut 1 - 8 11, 13
F1020250 Nylock Hex Nut M20 x 2.50 17
F1201021 Flat Washer M10 7, 9, 21
F1201224 Flat Washer M12 7, 9, 19
F1201630 Flat Washer M16 31
F1202037 Flat Washer M20 7, 9
F1300100 Flat Washer Narrow 1” 11, 13, 15
F1401200 Lock Washer M12 21, 31
F1401628 Lock Washer M16 31
F1900050 Wedge Lock Washer ½ 23
F1900063 Wedge Lock Washer ⅝ 23
F1900075 Wedge Lock Washer ¾ 33
F2510100 Set Screw Socket Head 1 - 8 x 1 11
F2803000 Hytorc Reaction Washer M30 23
F3616020 Socket Head Shoulder Screw M16 x 2 x 20 31
General Arrangement 4, 5
H0262125 Split Flange Half 1.25 Code 62 31
H0262150 Split Flange Half 1.50 Code 62 31
Mach Auto Guide 15
Mach Bearing 21
Mach Boom Bearing 21
Mach Main Shaft 9
Mach Port Block 31
Mach Spacer Sleeve 21
O-Ring 31
O-Ring Boss & Flat Face O-Ring Torque Specifications 43
Parts Order Form 47
Parts Order Policy and Procedure 46
Procedures 40, 41
Regen Block Sub-Assembly - 6360021 34, 35
S0190214 O-Ring (90 Durometer -214) 23
S0190222 O-Ring 31
S0190225 O-Ring 31
S0190250 O-Ring (90 Durometer -250) 23
S0190350 O-Ring 7, 9
Seal Kit 6300622 27, 34, 35
Seal Kit 6300624 34, 35
Seal Kit 6300633 26, 27
Seal Kit 6300634 28, 29
Seal Kit SK00023 34, 35
Seal Kit SK00024 34, 35
Seal Kit SK00058 26
Seal Kit SK00129 35
Seal Kit SK00156 26, 27
Socket Head Capscrew M16 x 2.00 x 110 31
Sub-Assembly Line Mount Manifold 5, 25, 28, 29
Sub-Assembly Regen Block 5
Sub-Assembly Rotate Cross-over / C’bal 5, 26, 27
Sub-Assembly Rotate Cross-over/C’bal 25
Table of Contents 3
Thread Treatment Diagram 39
Torque Arm Kit 33
Valve Regen 31
Warranty 45
Wldt Pin 21
Wtmg Lug Upper Head 5, 21
Wtmg Stick 5
Wtmg Upper 5

© 2026 Genesis Attachments, LLC

GENESIS®
The Promise of Performance.

CONTACT INFORMATION

Genesis Attachments

1000 Genesis Drive
Superior, WI 54880 USA

Toll Free: 888-SHEAR-IT
(888-743-2748)

Phone: 715.395.5252

E-mail:
info@genesisattachments.com

Europe/Africa/Middle East
Genesis GmbH

Teramostrasse 23
87700 Memmingen, Germany

Phone: +49 83 31 9 25 98 0
Fax: +49 83 31 9 25 98 80
genesis-europe.com

E-mail:
info@genesis-europe.com

Asia Pacific Representative Office

24 Upper Serangoon View #12-28
Singapore 534205

Phone: +65 9673 9730

E-mail:
tchoo@genesisattachments.com

Central America & Colombia

Cra 13A #89-38 / Ofi 613
Bogota, Colombia

Phone: +57 1 610 8160 / 795 8747

E-mail:
contact@themsagroup.com

View and download all manuals: genesisattachments.com/manuals
Patents: genesisattachments.com/products/patents

Rev. 11-24-26

An NPK Company